HiFi ENGINE®

For more Hi-Fi manuals and set-up information
please visit www.hifiengine.com

Nakamichi

Service Manual

Nakamichi
RX-202
RX-202E

Unidirectional Auto Reverse Cassette Deck

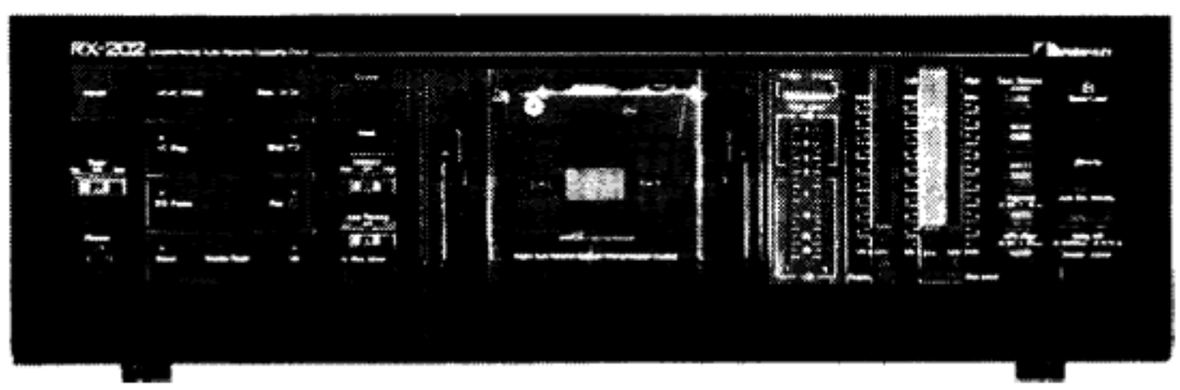

CONTENTS

1. General 1
2. Mechanical Adjustments 2
   2. 1. Tape Guide Height Check for Record/Playback Head and Erase Head 2
   2. 2. Head Base Stroke Check 2
   2. 3. Record/Playback Azimuth Alignment and Height Check 2
   2. 4. Pressure Adjustment of Pressure Roller 2
   2. 5. Slide Base Position Adjustment (on the Logic P.C.B. Ass'y) 2
   2. 6. Tape Travelling Check 3
   2. 7. Reel Motor Speed Adjustment in Play Mode 3
   2. 8. Tape Speed Adjustment 3
   2. 9. Lubrication 3
3. Parts Location for Electrical Adjustment 4
4. Electrical Adjustments and Measurements 5
   4. 1. Adjustment and Measurement Instructions 5
   4. 2. Playback Frequency Response Adjustment 7
   4. 3. Dolby NR Circuit Check 8
5. Mechanism Ass'y and Parts List 9
   5. 1. Synthesis 9
   5. 2. Chassis Ass'y (A01) 10
   5. 3. Rear Panel Ass'y RX202 (B01) 11
   5. 4. Synthesis Mechanism Ass'y (B02) 11
   5. 5. S Mechanism Ass'y (C01) 12
   5. 6. RS Mechanism Ass'y (C02) 12
   5. 7. Mechanism Ass'y (D01) 13
   5. 8. Motor Holder Ass'y (E01) 14
   5. 9. S Slide Chassis Ass'y (E02) 14
   5. 10. Main Chassis Ass'y (E03) 14
6. Mounting Diagrams and Parts List 15
   6. 1. Power Switch P.C.B. Ass'y 15
   6. 2. Shut-off P.C.B. Ass'y 15
   6. 3. Lid Lamp P.C.B. Ass'y 15
   6. 4. Eject Switch P.C.B. Ass'y 15
   6. 5. Tape Switch P.C.B. Ass'y 16
   6. 6. Volume P.C.B. Ass'y 16
   6. 7. Counter P.C.B. Ass'y 17
   6. 8. Control Switch P.C.B. Ass'y 17
   6. 9. Fader P.C.B. Ass'y 18
   6. 10. Main P.C.B. Ass'y 20
   6. 11. Logic P.C.B. Ass'y 24
7. Schematic Diagrams 26
   7. 1. Attention to Servicemen 26
   7. 2. IC Block Diagrams 26
   7. 3. Schematic Diagrams 27
8. Wiring Diagram 30
9. Block Diagrams 31
10. Timing Chart and Eq. Amp. Frequency Response 32
11. Specifications 34

1. GENERAL

1.1. Voltage Selector

Voltage selector is installed on the rear panel for Other version of the Nakamichi RX-202.
This voltage selector can select either 120 V or 220-240 V at customer's disposal.

1.2. Packing Materials and Owner's Manual

Part No.	Description	Q'ty
0F03725A	Carton Box RX202	1
0F03743A	Carton Box RX202E	1
0F03726A	Packing	2
0D04294B	Owner's Manual (RX202 (U.S.A., Canada & Australia) & RX202E (UK))	1
0D04296B	Owner's Manual (RX202 (Japan))	1
0D04295A	Owner's Manual (RX202 (Others) & RX202E (220V Class 2)	1

2. MECHANICAL ADJUSTMENTS

2.1. Tape Guide Height Check for Record/Playback Head and Erase Head

With use of an M-300 produced by Information Terminals, tape guide height check for the Record/Playback and Erase Heads shall be made, wherein a small block shall be pushed straight down to the base while in use of the M-300. Refer to Fig. 2.1.

(1) Record/Playback Head Tape Guide Height
(a) Load the base of the M-300 carefully, then set the cassette deck in Play mode.
(b) Place the small block of the M-300 on the base.
(c) Slide the small block against the tape guide of the Record/Playback Head, and check to insure that the block is accepted by the tape guide.
(d) If not, loosen the screw and insert a shim (either 30 μm (0C80048A), 60 μm (0C80038A), or 100 μm (0C80039A)) to raise the Record/Playback Head, then tighten and apply a quantity of lock tight paint to the screw.

(2) Erase Head Tape Guide Height
(a) Load the base of the M-300 carefully, then set the cassette deck in Play mode.
(b) Place the small block of the M-300 on the base.
(c) Slide the small block against the tape guide of the Erase Head, and check whether the block is accepted by the tape guide.

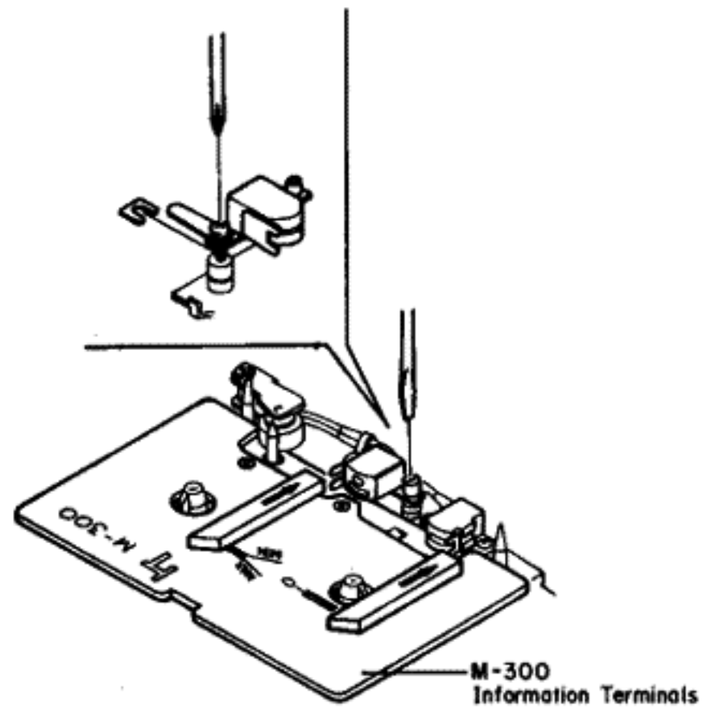

Fig. 2.1

2.2. Head Base Stroke Check

Refer to Fig. 2.2.
(1) Load the base of the M-300 carefully, then push the base toward the Record/Playback Head to eliminate the clearance between the reference pin and the base.
(2) Set the cassette deck in Play mode.
(3) Place the small block of the M-300 on the base.
(4) Contact the small block with the Record/Playback Head surface and the Erase Head surface, and check whether the end of the small block is located within the specified tolerance as shown in the figure.

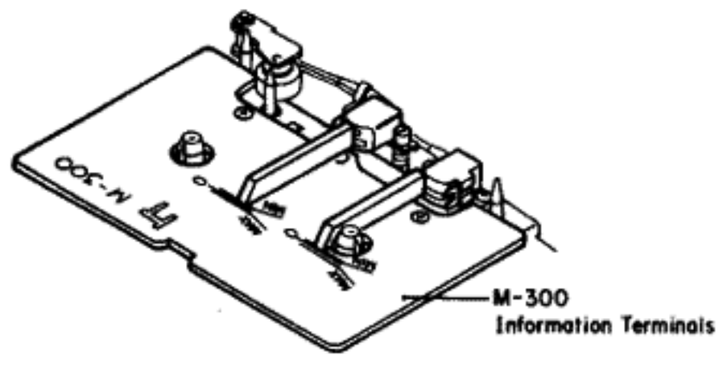

Fig. 2.2

2.3. Record/Playback Azimuth Alignment and Height Check

Refer to Fig. 2.1.
(1) Connect a VTVM to the Output Jacks.
(2) Load a 15 kHz Azimuth Tape (DA09004B), then set the cassette deck in Play mode.
(3) Turn the Azimuth Alignment Screw until the outputs of both channels become maximum.
(4) Load a 1 kHz Track Alignment Tape (DA09007B), then set the cassette deck in Play mode.
(5) Check to insure that the readings of both channels on the VTVM are below −25 dB.
If not, replacement of the Record/Playback Head will be required.
(6) Apply a quantity of lock tight paint to the Azimuth Alignment Screw.

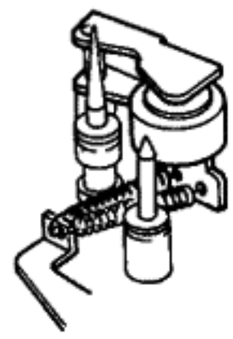

Fig. 2.3

2.4. Pressure Adjustment of Pressure Roller

Refer to Fig. 2.3.
(1) In Play mode, measure the torque of the Pressure Roller and check whether the torque is in a range of 320 ±50 g-cm.
(2) If torque is out of the range, correct it by changing the installation point of the Pressure Roller Spring.

2.5. Slide Base Position Adjustment (on the Logic P.C.B. Ass'y)

(1) Pull out the connector CN-7 on the Logic P.C.B. Ass'y.
(2) Ground the test pin CAM B with a jumper wire to set the cassette case to its side A.
(3) Adjust VR502 to obtain a gap of 2 to 4 mm as shown in Fig. 2.4.
(4) Ground the test pins CAM B and CAM A with jumper wires to set the cassette case to its side B.
(5) Adjust VR503 to obtain a gap of 2 to 4 mm as shown in Fig. 2.4.
(6) Ground only the test pin CAM A with a jumper wire to set the cassette case to its eject position.
(7) Adjust VR501 to the position where the cassette case is about to start rotation.
(8) Repeat above steps (2) to (7) two or three times.
(9) Plug CN-7 into the original place.

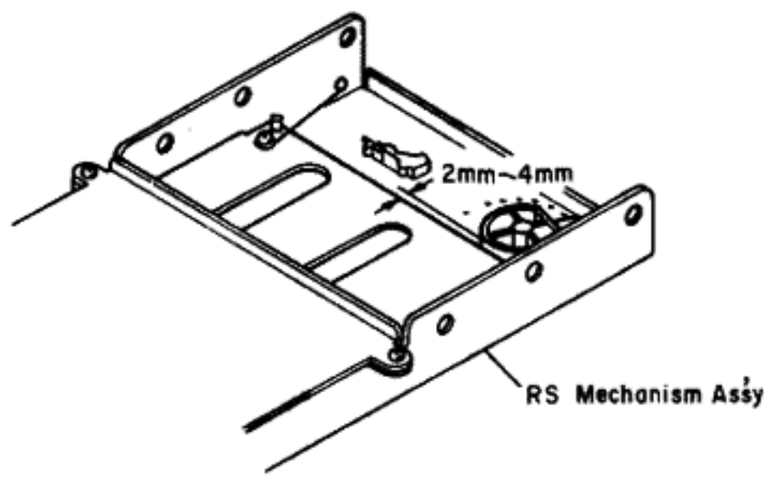

Fig. 2.4

2.6. Tape Travelling Check

Load the Tape Travelling Cassette (DA09027B), then set the cassette deck in Play mode and check the following:

(1) After more than 2 seconds, the fluctuation of the tape travelling on the Record/Playback Head is small.
(2) Tape is in contact with the head sufficiently.
(3) Tape waving is small on the heads and pressure roller.

2.7. Reel Motor Speed Adjustment in Play Mode

(1) To warm-up the cassette deck, load a C-60 cassette tape and set the cassette deck in Play mode.
(2) After more than four minutes, load a torque meter TW-211 (made by Sony) and set the cassette deck in Play mode.
(3) Adjust VR601 on the Logic P.C.B. Ass'y to obtain exactly 50 g-cm on the torque meter.

2.8. Tape Speed Adjustment

Refer to Fig. 2.5.

(1) Connect a frequency counter to the Output Jacks.
(2) Load a 3 kHz Speed and Wow/Flutter Tape (DA09006C) and Play it back.
(3) Adjust the Tape Speed Adjustment Volume incorporated in the Capstan Motor to obtain 3,000 Hz on the frequency counter.
    CCW: Motor drives slowly.
    CW: Motor drives fast.

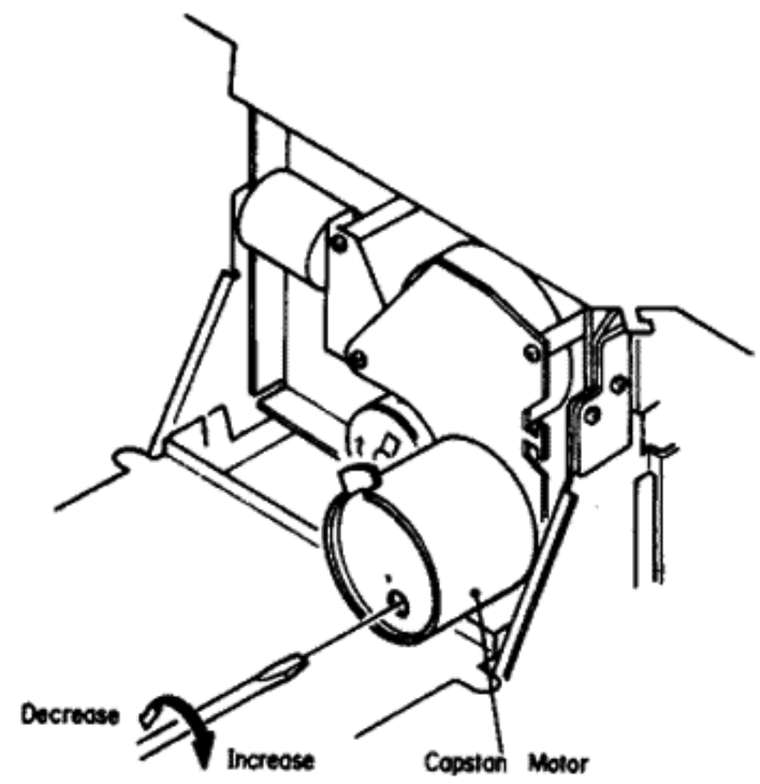

Fig. 2.5

2.9. Lubrication

The tape transport is of a lubrication-free type mechanism. When the following parts are replaced, apply the specified lubricant.

(1) Molykote ® Grease (X5-6020)
    Cam Motor Pulley
    Thrust portion on the Capstan Shaft
(2) FLOIL GB-TS-1
    Washer between Reel Hub Ass'y and Back Tension Spring
(3) Diamond Oil (EP56)
    Reel Hub Shaft
(4) Anderol 456
    Capstan Shaft

Note: We suggest that you use the above specified lubricant or equivalent type.
The company dealing in the above lubricant is as follows:

(a) Molykote ® Grease (X5-6020)
    Dowcorning Co., Ltd., 1-15-1 Nishishinbashi, Minato-ku, Tokyo, Japan
(b) FLOIL GB-TS-1
    Kanto Chemicals Co., Ltd., 2-7 Kanda Sakuma-cho, Chiyoda-ku, Tokyo, Japan
(c) Diamond Oil (EP-56)
    Mitsubishi Oil Co., Ltd., 1-2-4 Toranomon, Minato-ku, Tokyo, Japan
(d) Anderol 456
    Toyo Kokusai Oil Co., Ltd., 3-3-5 Hatchobori, Chuo-ku, Tokyo, Japan

3. PARTS LOCATION FOR ELECTRICAL ADJUSTMENT

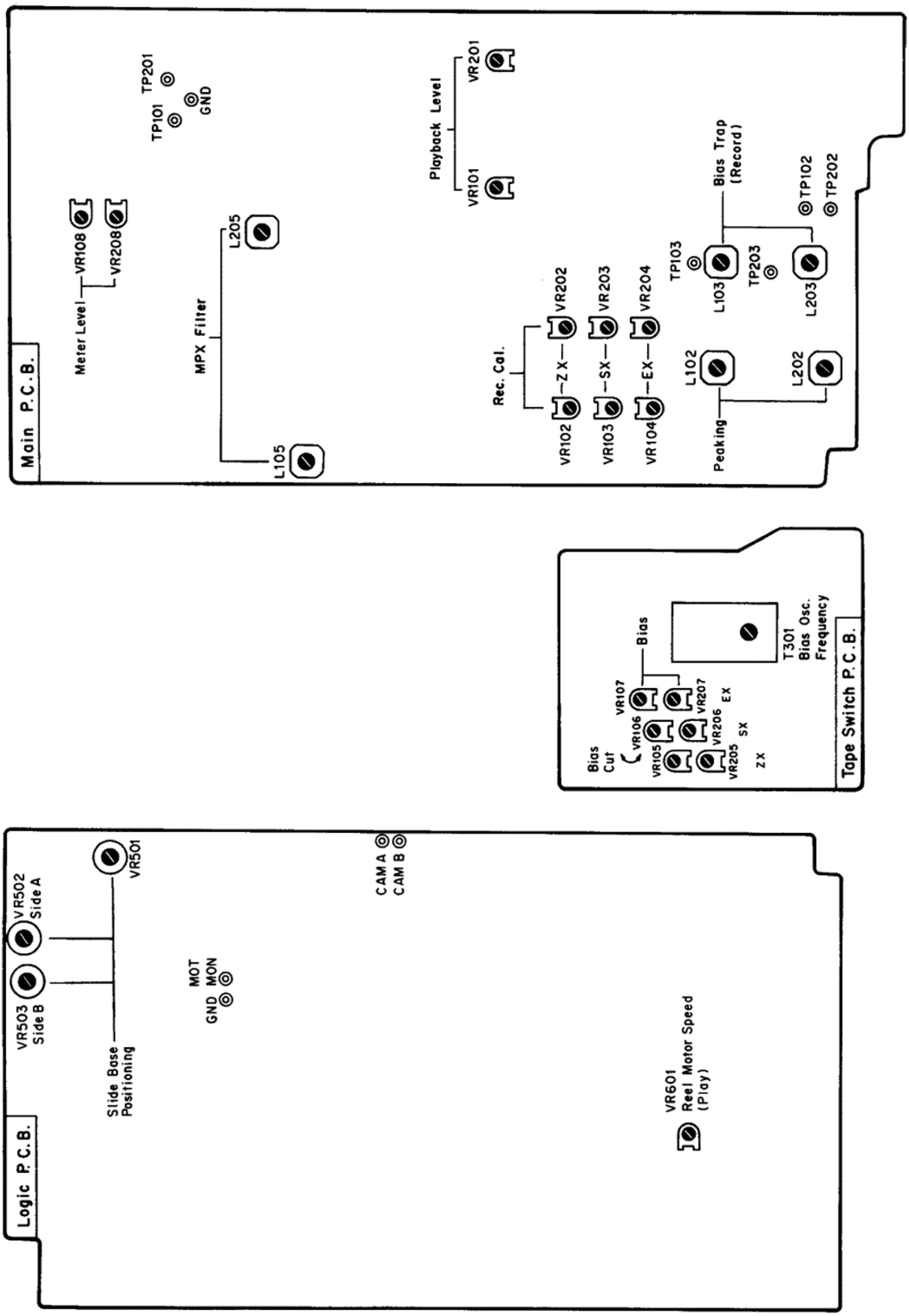

Fig. 3

4. ELECTRICAL ADJUSTMENTS AND MEASUREMENTS

Note: Electrical adjustment should be performed after mechanical adjustment is completed.

4.1. Adjustment and Measurement Instructions

STEP	ITEM	SIGNAL SOURCE	OUTPUT CONNECTION	MODE	ADJUST-MENT	REMARKS
1	Tape Speed Adjustment	3 kHz Speed and Wow/Flutter Tape (DA09006C)	Frequency Counter to Output Jacks	Playback Eq. SW — 70 μs	Tape Speed Adjustment Volume	Adjust the volume incorporated in the capstan motor to obtain 3 kHz ±0.5% on the frequency counter.
2	Meter Level Calibration	400 Hz to Input Jacks	VTVM to TP101, TP201 on Main P.C.B.	Record, Pause	Main P.C.B. VR108,VR208	1. Feed in 400 Hz, then adjust the Input Level control to obtain 350 mV —0.8 dB on the VTVM. 2. Adjust VR108 (VR208) so that the 0 dB segment of the level meter starts illuminating. 3. Adjust the Input Level control to obtain 350 mV on the VTVM, then decrease the generator output level by 20 dB. 4. Check to insure that the segment for —20 dB illuminates.
3	MPX Filter Adjustment	19 kHz ±100 Hz to Input Jacks	VTVM to Output Jacks	Record, Pause MPX SW — OFF/ON	Main P.C.B. L105,L205	1. Adjust the Input Level control to obtain 0 dB (500 mV) on the VTVM. 2. Set the MPX Filter switch to ON, then adjust L105 (L205) to obtain minimum reading on the VTVM (minimum reading will be less than —30 dB).
4	Record/ Playback Head Azimuth Alignment	15 kHz Azimuth Tape (DA09004B)	VTVM to Output Jacks	Playback Eq. SW — 70 μs Dolby NR SW — OFF MPX SW — OFF	Record/Playback Head Azimuth Alignment Screw	Adjust the Record/Playback Head Azimuth Alignment Screw to obtain maximum readings of both channels on the VTVM.
5	Playback Level Calibration	400 Hz Level Tape (DA09005B)	VTVM to TP101, TP201 on Main P.C.B.	Same as above	Main P.C.B. VR101,VR201	Adjust VR101 (VR201) to obtain 350 mV on the VTVM.
6	Playback Frequency Response Adjustment	400 Hz Level Tape (DA09005B) 10 kHz PB Frequency Response Tape (DA09003B) 15 kHz PB Frequency Response Tape (DA09002B) 20 kHz PB Frequency Response Tape (DA09001B)	VTVM to Output Jacks	Playback Eq. SW — 70 μs Dolby NR SW — OFF MPX SW — OFF	Main P.C.B. R110,R210 R195,R295	1. Load a 400 Hz level tape and play it back. 2. Load 10 kHz, 15 kHz and 20 kHz PB frequency response tapes and adjust the record/playback head azimuth to obtain maximum levels on the VTVM with each tape. 3. Read the maximum levels with each tape and check to insure that the levels against the 400 Hz level tape are within the following ranges. If not, short R110 (R210) or R195 (R295) on the Main P.C.B. Ass'y to obtain satisfactory results. 10 kHz (—20 dB) —2 dB to +2 dB 15 kHz (—20 dB) —2 dB to +3 dB 20 kHz (—20 dB) —2 dB to +4 dB Check to insure that the difference in level between 10 kHz (—20 dB) and 20 kHz (—20 dB) is less than 2 dB. Refer to the "Playback Frequency Response Adjustment" in item 4.2 for the detailed description. 4. Conduct step 4 "Record/Playback Head Azimuth Alignment".
7	Bias Oscillation Frequency and Erase Current Adjustment		Frequency Counter to TP102 on Main P.C.B. and VTVM across the additional 0.1 Ω resistor	Record, Pause Tape SW — ZX Eq. SW — 70 μs Dolby NR SW — OFF MPX SW — OFF	Tape SW P.C.B. T301 R318,R350	1. Adjust T301 to obtain 105 kHz on the frequency counter. 2. Connect an additional 0.1 Ω resistor in series to the Erase Head, then connect a VTVM across it. 3. Check the erase current by the VTVM. Erase current will be in a range of 145 mA to 185 mA (typically approx. 165 mA). If erase current is not sufficient, increase it by shorting R318 or R350. 4. After completion of the erase current adjustment, re-check the bias oscillation frequency. 5. Remove the additional 0.1 Ω resistor.
8	Record Amplifier Equalizer Adjustment	21 kHz (—20 dB) to Input Jacks	VTVM to TP102, TP202 on Main P.C.B.	Same as above	Main P.C.B. L102,L202	1. Short both Bias Stop test pins with a clip to stop the bias oscillation. 2. Adjust L102 (L202) to obtain peak reading at 21 kHz on the VTVM. 3. Remove the clip from the test pins.
9	Bias Trap Adjustment (Record Amp.)	Remove input signals	VTVM to TP103, TP203 on Main P.C.B.	Same as above	Main P.C.B. L103,L203	Adjust L103 (L203) to obtain maximum reading on the VTVM.

STEP	ITEM	SIGNAL SOURCE	OUTPUT CONNECTION	MODE	ADJUST-MENT	REMARKS
10	Record Level Calibration and Recording Bias Current Adjustment	400 Hz (0 dB), 400 Hz (—20 dB), 10 kHz (—20 dB) and 17 kHz (—20 dB) to Input Jacks	VTVM to TP101, TP201 and TP102, TP202 on Main P.C.B. and VTVM and Distortion Meter to Output Jacks	Record and Playback Tape SW — ZX/SX/EX Eq. SW — 70 μs (ZX/SX) 120 μs (EX) Dolby NR SW — C-Type/B-Type/OFF MPX SW — OFF	Main P.C.B. (Level) ZX: VR102,VR202 SX: VR103,VR203 EX: VR104,VR204 Tape SW P.C.B. (Bias) ZX: VR105,VR205 SX: VR106,VR206 EX: VR107,VR207	Adjustment should be made in the order of ZX, SX and EX. 1. Set the Dolby NR switch to C-Type. 2. Connect a VTVM to TP101 (TP201) on the Main P.C.B. Ass'y. 3. Set the RX-202 in Record/Pause mode. 4. Feed in 400 Hz, then adjust the Input Level control to obtain 350 mV (0 dB) on the VTVM. 5. Load a reference ZX tape (DA09037B), reference SX tape (DA09025B) and reference EXII tape (DA09066B). 6. Adjust Record Cal. VR102 (VR202) for ZX, VR103 (VR203) for SX and VR104 (VR204) for EXII to center positions. 7. Connect the VTVM to TP102 (TP202) on the Main P.C.B. Ass'y. Adjust Bias VR105 (VR205) for ZX, VR106 (VR206) for SX and VR107 (VR207) for EXII to obtain the following bias current in Record/Pause mode (the VTVM is connected across a 10-ohm resistor). ZX: approx. 1 mA SX: approx. 0.5 mA EXII: approx. 0.3 mA 8. Connect the VTVM to the Output Jacks. 9. Feed in 400 Hz (—20 dB) and 17 kHz (—20 dB), then record, rewind and play them back. Adjust Bias VR105 (VR205) for ZX, VR106 (VR206) for SX and VR107 (VR207) for EXII to obtain the same playback levels at 400 Hz (—20 dB) and 17 kHz (—20 dB) on the VTVM. 10. Feed in 400 Hz (0 dB), then record, rewind and play it back. Adjust Record Cal. VR102 (VR202) for ZX, VR103 (VR203) for SX and VR104 (VR204) for EXII to obtain 0 dB on the VTVM. 11. Repeat above 9 and 10 two or three times to obtain optimum performance. 12. Set the Dolby NR switch to OFF. 13. Feed in 400 Hz (—20 dB), 10 kHz (—20 dB) and 17 kHz (—20 dB), then record, rewind and play them back. Check to insure that the playback levels are within —20 dB ±3 dB against the levels in Dolby NR C-Type. 14. Set the Dolby NR switch to B-Type. 15. Feed in 10 kHz (—20 dB) and 17 kHz (—20 dB), then record, rewind and play them back. Check to insure that the levels are within —20 dB ±2 dB against the levels in Dolby NR OFF. 16. Check to insure whether the total harmonic distortion is less than 1.0% for ZX and EXII tapes and 1.2% for SX tape. 17. If above is not sufficient, repeat 9 to 16 till satisfactory results are obtained.
11	Overall Frequency Response Adjustment	400 Hz (0 dB) and 20 Hz to 17 kHz (—20 dB) to Input Jacks	VTVM to Output Jacks	Record and Playback Tape SW — ZX/SX/EX Eq. SW — 70 μs (ZX/SX) 120 μs (EX) Dolby NR SW — OFF MPX SW — OFF	Main P.C.B. L102,L202	1. Set the RX-202 in Record/Pause mode. 2. Feed in 400 Hz, then set the Input Level control to obtain 0 dB (500 mV) on the VTVM. 3. Decrease the generator output control by 20 dB. 4. Feed in 20 Hz to 17 kHz (—20 dB) and record, rewind and play them back, then check to insure whether the output levels are within —20 dB ±4 dB. 5. If above is not sufficient, adjust L102 (L202) to obtain approx. —20 dB on the VTVM, then conduct step 10 "Record Level Calibration and Recording Bias Current Adjustment". 6. If above is not sufficient, precise re-adjustment of step 6 "Playback Frequency Response", replacement of Record/Playback Head or check on item 2.6 "Tape Travelling Check" will be required.
12	Crosstalk Measurement	1 kHz to Input Jacks	1 kHz Band Pass Filter and VTVM to Output Jacks	Record and Playback Tape SW — ZX Eq. SW — 70 μs Dolby NR SW — OFF MPX SW — OFF		1. Erase the tape with bulk eraser. 2. Adjust the Input Level control to obtain 0 dB on the VTVM, and record the signals on the reference ZX tape (DA09037B). 3. Turn the cassette tape the other way round and play it back. 4. Measure the difference between 2 and 3.

STEP	ITEM	SIGNAL SOURCE	OUTPUT CONNECTION	MODE	ADJUST-MENT	REMARKS
13	Channel Separation Measure-ment	1 kHz to Input Jacks	1 kHz Band Pass Filter and VTVM to Output Jacks	Record and Playback Tape SW — ZX Eq. SW — 70 μs Dolby NR SW — OFF MPX SW — OFF		1. Erase the tape with bulk eraser. 2. Adjust the Input Level control to obtain 0 dB on the VTVM, and set the Balance control to the extreme left (right). 3. Record, rewind and play it back, then measure the R ch (L ch) level.
14	Erasure Measure-ment	100 Hz to Input Jacks	100 Hz Band Pass Filter and VTVM to Output Jacks	Same as above		1. Erase the tape with bulk eraser. 2. Adjust the Input Level control to obtain 0 dB on the VTVM, and record the signals on the reference ZX tape (DA09037A). 3. Rewind the tape, set the Input Level control to minimum, and then record again. 4. Rewind the tape, play it back, and then measure the difference between 2 and 3.
15	Signal to Noise Ratio Measure-ment	400 Hz to Input Jacks	IHF-A Curve, Filter, VTVM and Distortion Meter to Output Jacks	Record and Playback Tape SW — ZX Eq. SW — 70 μs Dolby NR SW — B-Type/C-Type MPX SW — OFF		1. Set the Dolby NR switch to B-Type/C-Type. 2. Feed in 400 Hz, then record, rewind and play it back. 3. Adjust the Input Level control to obtain 3% total harmonic distortion in Playback mode. 4. Set the Input Level control to minimum then record again. 5. After rewound, play back and check the output level difference between 3 and 4. Note: The filter of IHF-A curve shall be used in the measurements.
16	Total Harmonic Distortion Measure-ment	400 Hz to Input Jacks	VTVM and Distortion Meter to Output Jacks	Record and Playback Tape SW — ZX/SX/EX Eq. SW — 70 μs (ZX/SX) 120 μs (EX) Dolby NR SW — OFF MPX SW — OFF		1. Adjust the Input Level control to obtain 0 dB on the VTVM. 2. Record, rewind and play it back. 3. Read the distortion meter and check to insure that the distortion is as follows: EXII . . . . . 1.0% or less SX . . . . . 1.2% or less ZX . . . . . 1.0% or less
17	Wow/ Flutter Measure-ment	3 kHz Speed and Wow/ Flutter Tape (DA09006C)	Wow/Flutter Meter to Output Jacks	Playback Eq. SW — 70 μs		Play back and read the wow/flutter meter.

4.2. Playback Frequency Response Adjustment

Figs. 4.1 and 4.2 show the playback amp. circuit for adjustment and the playback equalization curve.

This adjustment will be required if playback level is not sufficient during playing back a 20 kHz PB frequency response tape.

The peaking portion of the equalization curve compensates the gap loss of the playback head. Peaking level is varied by the short circuit of R110 (R210) or R195 (R295).

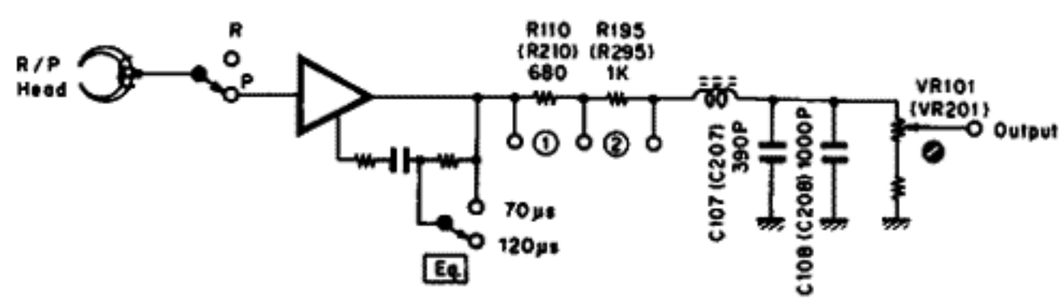

Fig. 4.1

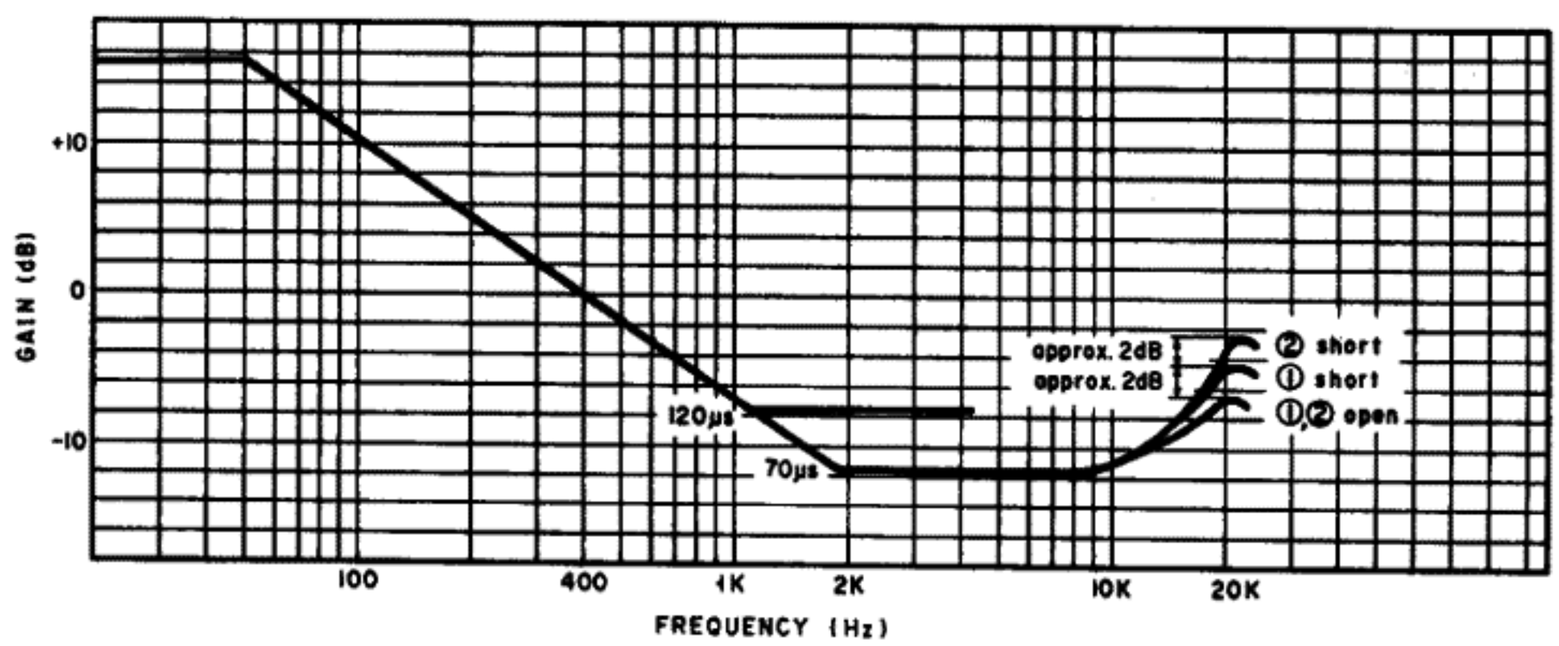

Fig. 4.2

4.3. Dolby NR Circuit Check

Dolby NR circuit incorporates Dolby NR ICs which have no adjustment point.
Perform the following checks and make sure that the IC operates accurately, i.e., frequency response through IC is accurate.

4.3.1. Dolby NR B-Type Circuit Check

(1) Playback Dolby NR Circuit

Signal Source: 1.4 kHz to negative side of C134 (C234) on Main P.C.B. (Positive side is connected to IC101-9 (IC201-9)).
Output Connection: VTVM to test point TP101 (TP201) on Main P.C.B.
Mode: Stop
Dolby NR SW — ON (B-Type)/OFF

(a) Connect a VTVM to TP101 (TP201) on the Main P.C.B. Ass'y.
(b) Set the Dolby NR switch to B-Type.
Feed in 1.4 kHz and adjust the generator output control to obtain 35 mV on the VTVM.
(c) Set the Dolby NR switch to OFF.
Check to insure that the reading is +3.2 dB ±1.5 dB on the VTVM.

(2) Record Dolby NR Circuit

Signal Source: 1.4 kHz to Input Jacks
Output Connection: VTVM to test point TP101 (TP201) and negative side of C140 (C240) on the Main P.C.B.
Mode: Record/Pause
Dolby NR SW — ON (B-Type)/OFF

(a) Connect a VTVM to TP101 (TP201) on the Main P.C.B. Ass'y.
(b) Feed in 1.4 kHz and adjust the Input level control to obtain 35 mV/11.1 mV on the VTVM.
(c) Remove the VTVM from TP101 (TP201) and reconnect it to negative side of C140 (C240).
(d) Check to insure that the reading at C140 (C240) corresponds to the following with Dolby NR switch OFF and B-Type.

Input Level at TP101 (TP201)	Level at negative side of C140 (C240)	
	Dolby NR OFF	Dolby NR B-Type
35 mV	0 dB	+3.2 dB ±1.5 dB
11.1 mV	0 dB	+8.2 dB ±1.5 dB

4.3.2. Dolby NR C-Type Circuit Check

(1) Playback Dolby NR Circuit

Signal Source: 1.4 kHz to negative side of C134 (C234) on Main P.C.B. (Positive side is connected to IC101-9 (IC201-9)).
Output Connection: VTVM to test point TP101 (TP201) on Main P.C.B.
Mode: Stop
Dolby NR SW — ON (C-Type)/OFF

(a) Connect a VTVM to TP101 (TP201) on the Main P.C.B. Ass'y.
(b) Set the Dolby NR switch to C-Type.
Feed in 1.4 kHz and adjust the generator output control to obtain 35 mV on the VTVM.
(c) Set the Dolby NR switch to OFF.
Check to insure that the reading is +6.5 dB ±1.5 dB on the VTVM.

(2) Record Dolby NR Circuit

Signal Source: 1.4 kHz to Input Jacks
Output Connection: VTVM to test point TP101 (TP201) and negative side of C140 (C240) on the Main P.C.B.
Mode: Record/Pause
Dolby NR SW — ON (C-Type)/OFF

(a) Connect a VTVM to TP101 (TP201) on the Main P.C.B. Ass'y.
(b) Feed in 1.4 kHz and adjust the Input level control to obtain 35 mV/11.1 mV on the VTVM.
(c) Remove the VTVM from TP101 (TP201) and reconnect it to negative side of C140 (C240).
(d) Check to insure that the reading at C140 (C240) corresponds to the following with Dolby NR switch OFF and C-Type.

Input Level at TP101 (TP201)	Level at negative side of C140 (C240)	
	Dolby NR OFF	Dolby NR C-Type
35 mV	0 dB	+6.5 dB ±1.5 dB
11.1 mV	0 dB	+11.4 dB ±1.5 dB

5. MECHANISM ASS'Y AND PARTS LIST

5.1. Synthesis

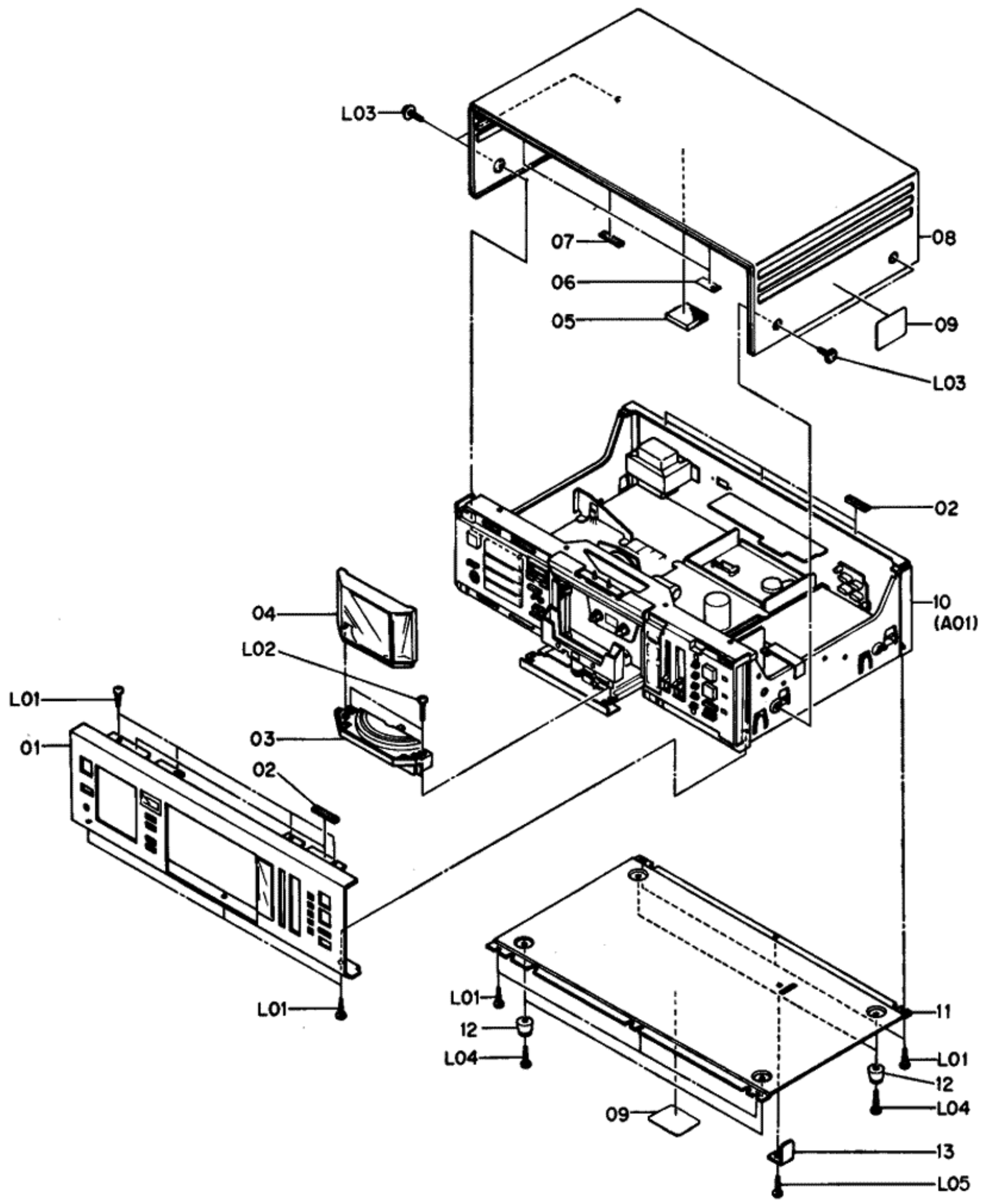

Fig. 5.1

Schematic Ref. No.	Part No.	Description	Q'ty	Schematic Ref. No.	Part No.	Description	Q'ty
		Synthesis		13	0C08583C	Slide Locker	1
01	HA04441A	Front Panel Ass'y RX202	1	—	0M03797A	Voltage Seal 240V (RX202 (Australia) & RX202E (UK))	1
	HA04551A	Front Panel Ass'y RX202E	1	—	0M04293A	Voltage Seal (RX202 (Others))	1
	(0H04230B)	(Front Panel RX202)	(1)	—	0M04113A	LA Label (RX202 (U.S.A. & Canada))	1
	(0H04352B)	(Front Panel RX202E)	(1)				
	(0H04240A)	(Control Lens)	(1)	—	0M04268A	Rating Label 23W (RX202 (Japan))	1
	(0H04241A)	(Counter Lens)	(1)				
	(0H04251A)	(Meter Cover)	(1)	—	MA01002A	Label (RX202 (Japan))	1
	(0J04745B)	(Meter Cover Adhesive Tape)	(7)	—	0M03844B	BS Code Label (RX202E (UK))	1
02	0J04550A	Top Cover Cushion	5	—	0M04434B	EP Label F (RX202E (220V Class 2))	1
03	HA04459B	CAT Bottom Ass'y	1				
04	0H04233B	CAT Main	1	—	MA01001A	F Code Label	1
05	0J04753A	Vibration Isolating Rubber	1	L01	0E00868A	BT 3x8 ⊕ Binding (Chromate)	13
06	0J04080A	Top Cover Himelon	2	L02	0E03007A	M3x12 ⊕ Binding (Black Chromate)	2
07	0J04715A	Top Cover Cushion	1				
08	0H04010A	Top Cover	1	L03	0E03032A	BT 4x8 ⊕ Pan Washer-faced (Black Chromate)	4
09	0M04377A	Caution Label (U.S.A. & Canada)	2	L04	0E00865A	BT 3x10 ⊕ Binding (Black Chromate)	4
10	—	Chassis Ass'y	1				
11	0J04737A	Bottom Cover	1	L05	0E03144A	BT 3x6 ⊕ Binding (Red Chromate)	1
12	0J03564A	Leg T-H	4				

5.2. Chassis Ass'y (A01)

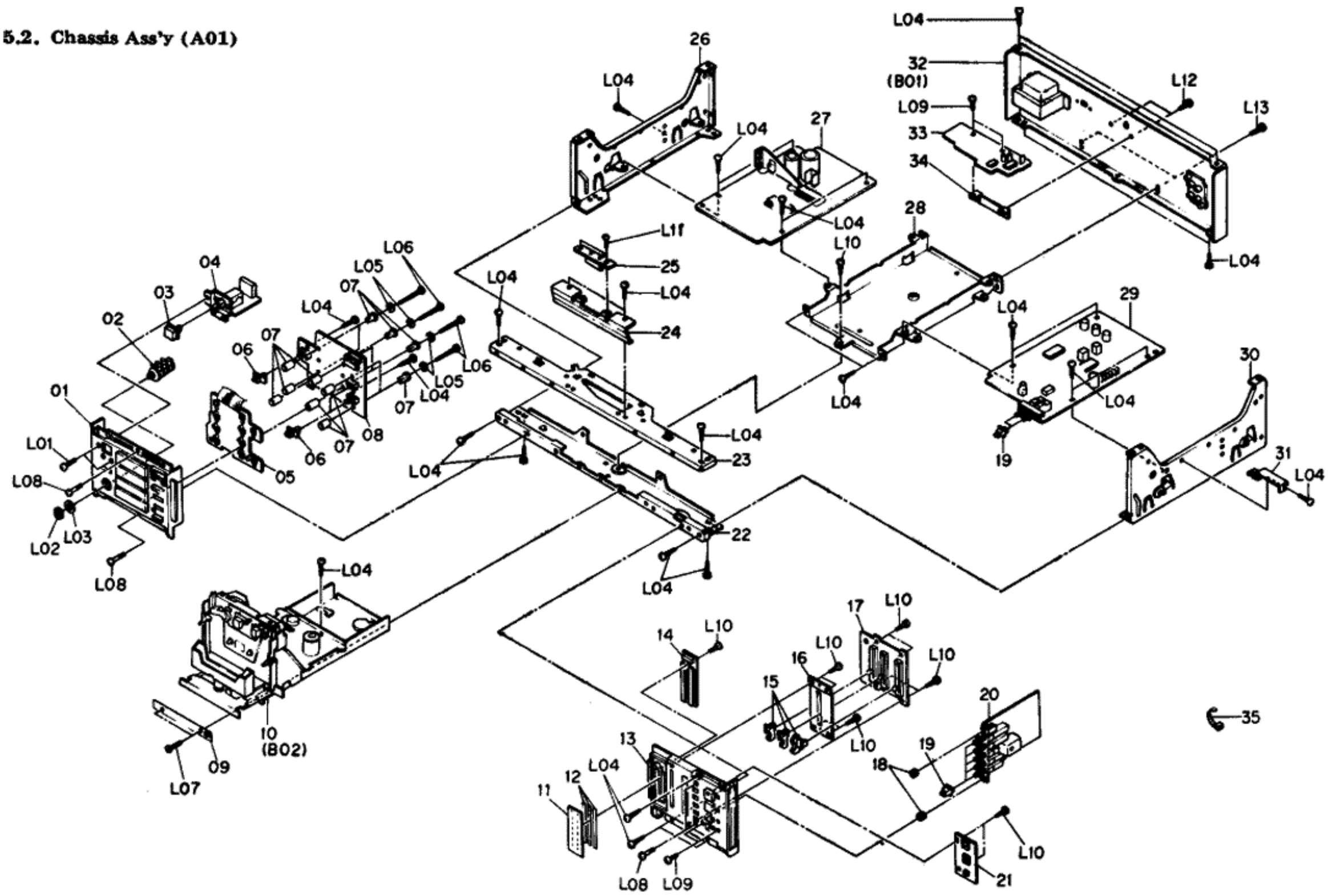

Fig. 5.2

Schematic Ref. No.	Part No.	Description	Q'ty	Schematic Ref. No.	Part No.	Description	Q'ty
A01		Chassis Ass'y	1		HA04449A	Rear Panel Ass'y RX202 (Others)	1
01	HA04444C	Front Panel Escutcheon L Ass'y	1		HA04450A	Rear Panel Ass'y RX202 (Australia)	1
02	0B08511A	Headphone Jack	1				
03	0H04243A	Power Switch Button	1		HA04446A	Rear Panel Ass'y RX202E (UK)	1
04	BA05018A	Power Switch P.C.B. Ass'y (RX202 (Others & Australia) & RX202E)	1		HA04451A	Rear Panel Ass'y RX202E (220V Class 2)	1
				33	BA05015A	Fader P.C.B. Ass'y	1
	BA05017A	Power Switch P.C.B. Ass'y (RX202 (U.S.A. & Canada))	1	34	0J03834C	Fuse P.C.B. Holder	1
				35	0B08515A	Insu-Lock	15
	BA05016A	Power Switch P.C.B. Ass'y (RX202 (Japan))	1	—	0M03954A	Fuse Caution Label C (RX202 (U.S.A. & Canada))	1
05	BA05012A	Control Switch P.C.B. Ass'y	1	—	0M04478A	Amp. No. Seal	1
06	0H04242A	Slide Switch Knob	3	—	0B08525A	Fuse 2A (RX202 (U.S.A. & Canada))	2
07	0J04703A	Collar Bushing	7				
08	BA05007A	Counter P.C.B. Ass'y	1	—	0B08854A	Fuse 2A (RX202 (Japan))	2
09	0J04757A	CAT Mechanism Himelon	1				
10	CA08483A	Synthesis Mechanism Ass'y	1	—	0B08347U	Fuse 1AT (RX202 (Others & Australia) & RX202E)	2
11	0H04249A	Meter Scale	1				
12	0J04746A	Meter Scale Adhesive Tape	3				
13	HA04445D	Front Panel Escutcheon R Ass'y	1	—	0B08349B	Fuse Clip (RX202 (Others & Australia) & RX202E)	2
14	0B12099A	Indicator LED	1				
15	0H04247B	Slide VR Knob	3	—	0M04131B	Fuse Label 1AT (RX202 (Others & Australia) & RX202E)	1
16	0H04250A	Slide VR Plate	1				
17	BA05008A	Volume P.C.B. Ass'y	1				
18	0J04752A	Push Switch Rubber	2	L01	0E00766A	M3x8 ⊕ Binding	2
19	0H04248A	Push Switch Button	7	L02	—	Nut for Headphone Jack	(1)
20	BA05006A	Tape Switch P.C.B. Ass'y	1	L03	—	Washer for Headphone Jack	(1)
21	BA05013A	Eject Switch P.C.B. Ass'y	1	L04	0E00868A	BT 3x8 ⊕ Binding (Chromate)	25
22	0J04732B	Bottom Angle	1	L05	0J04754A	Spacer 7.5mm	7
23	0J04733A	Upper Angle	1	L06	0E03136A	BT 3x16 ⊕ Binding	7
24	0H04232A	Lamp Cover	1	L07	0E03115A	BT 3x8 ⊕ Countersunk (Black Chromate)	2
25	BA05014A	Lid Lamp P.C.B. Ass'y	1				
26	0J04734A	Side Chassis L	1	L08	0E03135A	M3x8 ⊕ Binding	4
27	BA05009A	Logic P.C.B. Ass'y	1	L09	0E00896A	M3x6 ⊕ Binding (Chromate)	4
28	0J04736A	Center Chassis	1	L10	0E00857A	BT 3x6 ⊕ Binding (Chromate)	12
29	BA04999A	Main P.C.B. Ass'y	1	L11	0E03070A	M2.6x6 ⊕ Binding (Chromate)	2
30	0J04735A	Side Chassis R	1	L12	0E00985A	M3x6 ⊕ Binding (Black Chromate)	2
31	0J04742A	P.C.B. Holder	1				
32	HA04447A	Rear Panel Ass'y RX202 (U.S.A. & Canada)	1	L13	0E00921A	BT 3x8 ⊕ Binding (Black Chromate)	2
	HA04448A	Rear Panel Ass'y RX202 (Japan)	1				

5.3. Rear Panel Ass'y RX202 (B01)

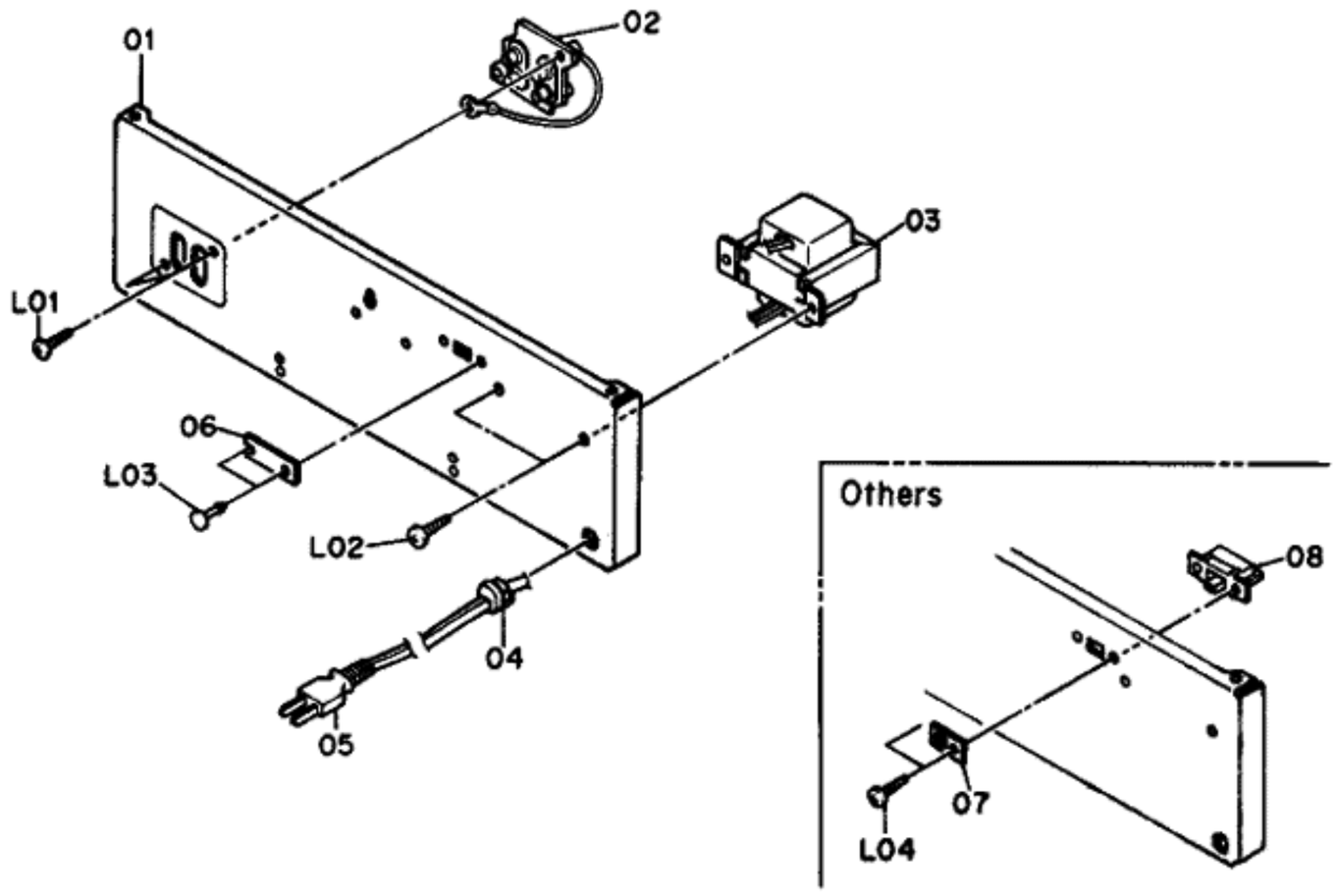

Fig. 5.3

5.4. Synthesis Mechanism Ass'y (B02)

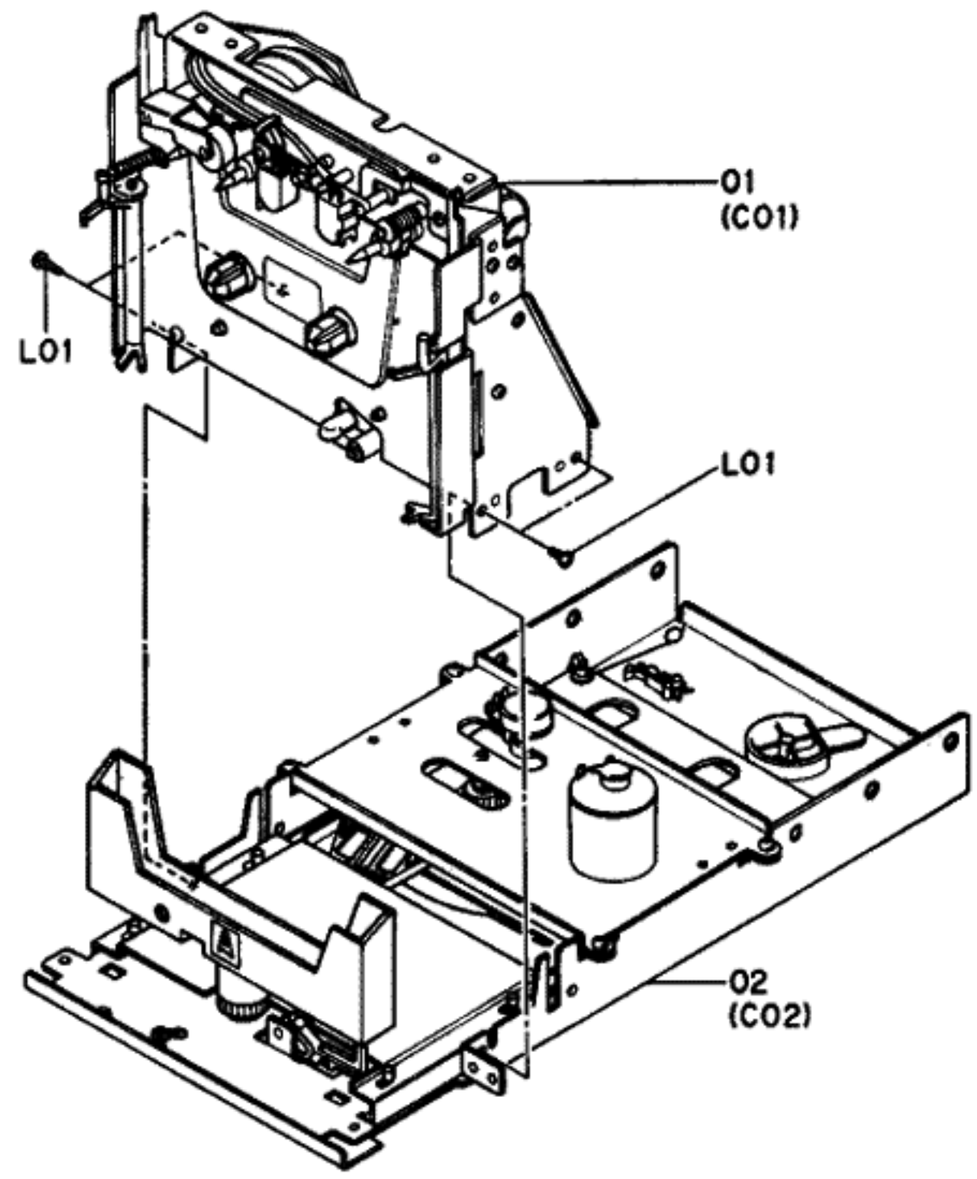

Fig. 5.4

Schematic Ref. No.	Part No.	Description	Q'ty
B01	HA04447A	Rear Panel Ass'y RX202 (U.S.A. & Canada)	1
	HA04448A	Rear Panel Ass'y RX202 (Japan)	1
	HA04449A	Rear Panel Ass'y RX202 (Others)	1
	HA04450A	Rear Panel Ass'y RX202 (Australia)	1
	HA04446A	Rear Panel Ass'y RX202E (UK)	1
	HA04451A	Rear Panel Ass'y RX202E (220V Class 2) Serial No.: A80201001 -	1
01	0H04378A	Rear Panel RX202	1
	0H04379A	Rear Panel RX202E	1
02	BA05027A	4P Pin Jack Ass'y	1
03	0B50009B	Power Transformer 220/240V (RX202 (Australia) & RX202E)	1
	0B50012A	Power Transformer 120V (RX202 (U.S.A. & Canada))	1
	0B50011A	Power Transformer 100V (RX202 (Japan))	1
	0B50010A	Power Transformer 115/230V (RX202 Others)	1
04	0B08351A	Cord Bushing 4K-4 (RX202E (UK))	1
	0B08037U	Cord Bushing C (RX202 & RX202E (220V Class 2))	1
05	0B08348A	Power Cord 2.5m (RX202E (UK))	1
	0B08533A	Power Cord SPT-1 (RX202 (U.S.A., Canada & Others))	1
	0B08219B	Power Cord (RX202 (Japan))	1
	0B05241A	Power Cord SAA (RX202 (Australia))	1
	0B08093U	Power Cord (RX202E (220V Class 2))	1
06	0J04601B	Switch Cover (RX202 (U.S.A., Canada, Japan & Australia) & RX202E)	1
07	0M03948A	Voltage Lock Plate D (RX202 (Others))	1
08	0B07092A	Voltage Selector Switch (RX202 (Others))	1
—	0F01071A	Free-up Belt (RX202 (Australia) & RX202E)	1
L01	0E00921A	BT 3x8 ⊕ Binding (Black Chromate)	2
L02	0E00915A	BT 4x8 ⊕ Binding (Black Chromate)	2
L03	0B08583A	Plastic Rivet (RX202 (U.S.A., Canada, Japan & Australia) & RX202E)	2
L04	0E00818A	M3x8 ⊕ Binding (Black Chromate)	2
B02	CA08483A	Synthesis Mechanism Ass'y Serial No.: A80201001 -	1
01	CA08484A	S Mechanism Ass'y	1
02	CA08485A	RS Mechanism Ass'y	1
L01	0E00854A	BT 2.6x4 ⊕ Pan (Chromate)	4

5.5. S Mechanism Ass'y (C01)

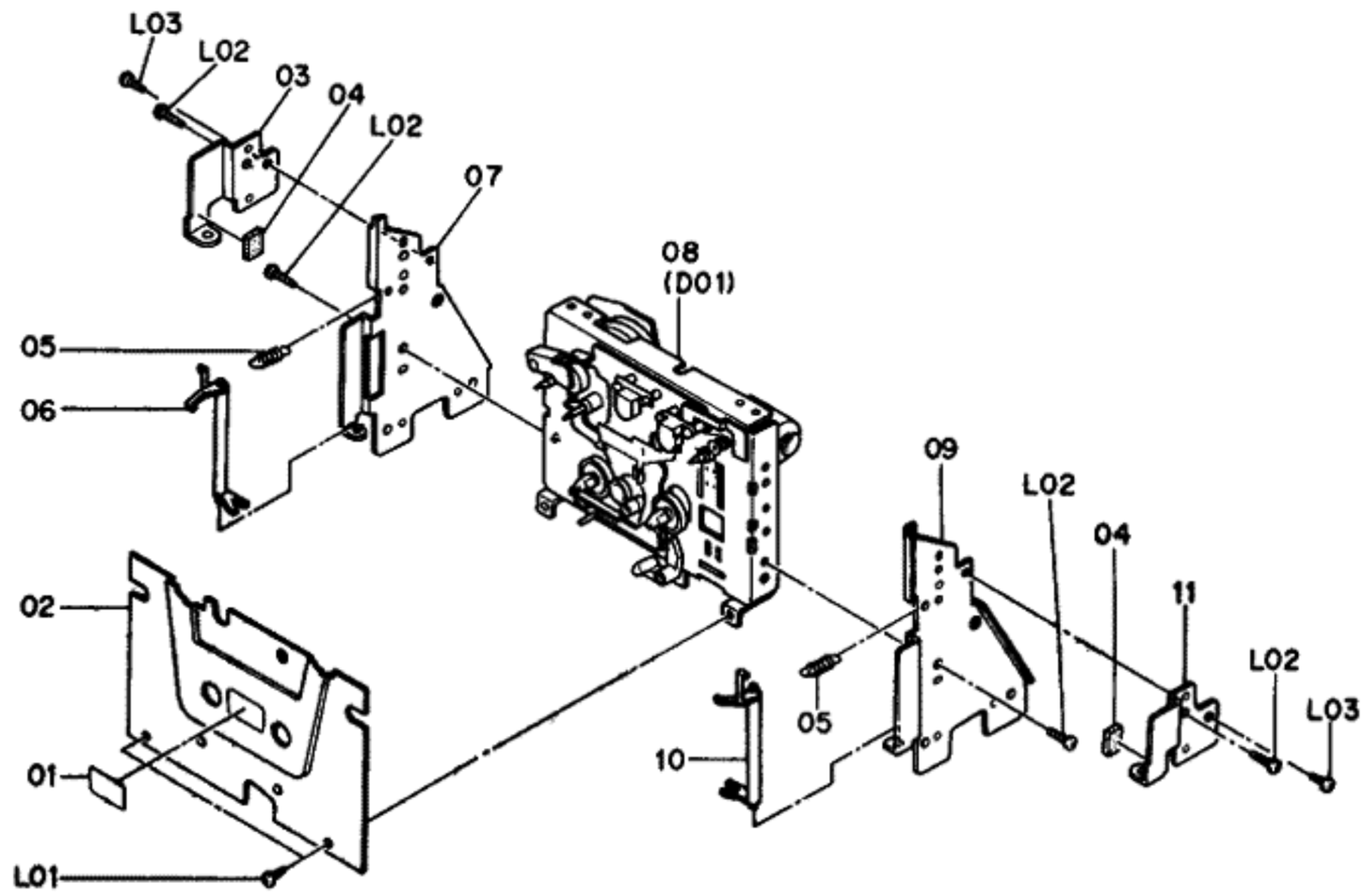

Fig. 5.5

5.6. RS Mechanism Ass'y (C02)

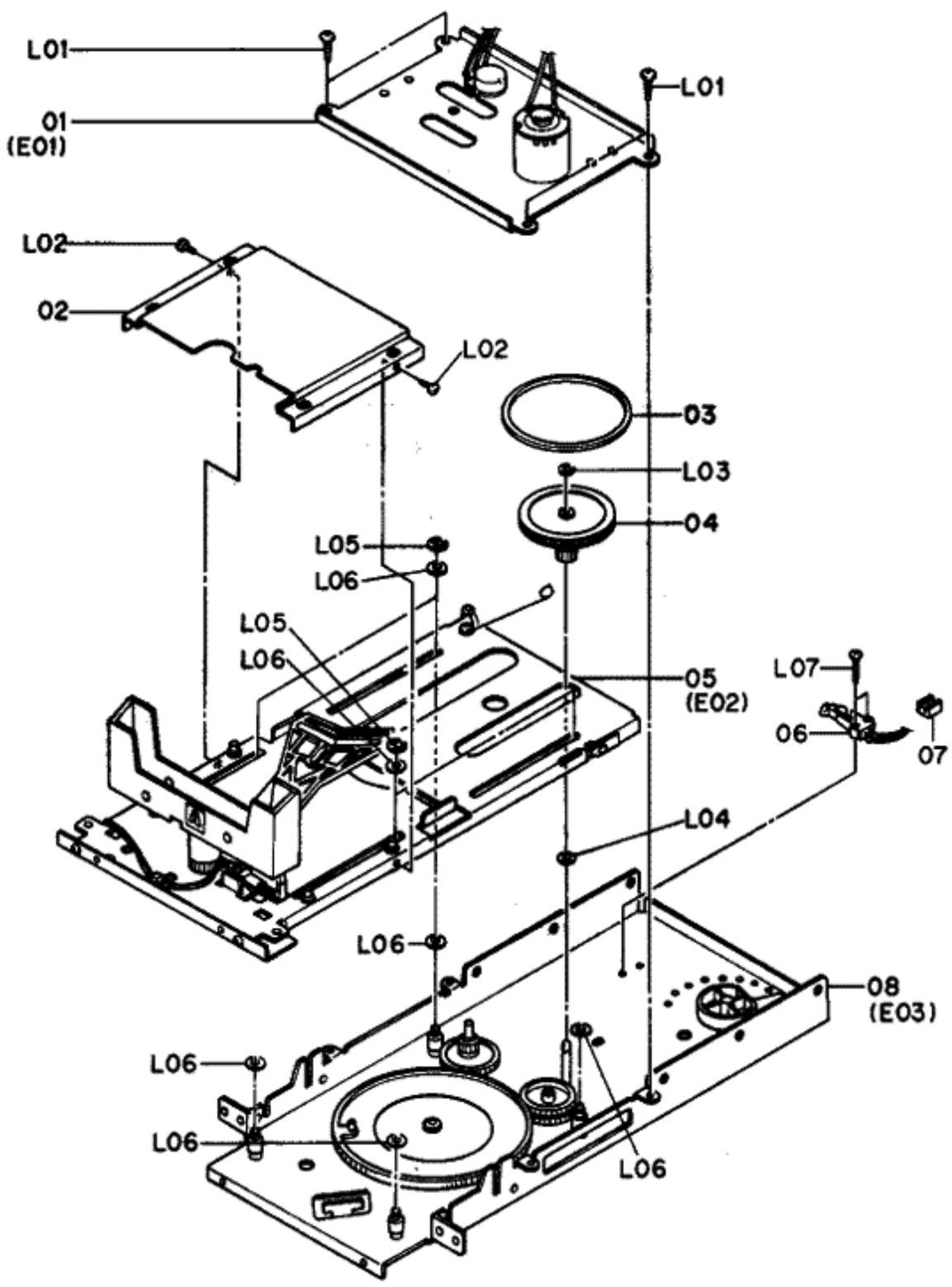

Fig. 5.6

Schematic Ref. No.	Part No.	Description	Q'ty
C01	CA08484A	S Mechanism Ass'y Serial No.: A80201001 -	1
01	0M04392A	Cassette Label (Gold)	1
02	0C08554A	S Cover Plate	1
03	0C08560A	S Lock Arm Holder LB	1
04	0C08601B	Cushion A	2
05	0C08546A	Lock Arm Spring	2
06	0C08541A	Lock Arm L	1
07	0C08559A	S Lock Arm Holder LA	1
08	CA08482A	Mechanism Ass'y	1
09	0C08561A	S Lock Arm Holder RA	1
10	0C08542A	Lock Arm R	1
11	0C08562A	S Lock Arm Holder RB	1
—	0C08599A	S Cushion	2
L01	0E03133A	BT 2.6x4 ⊕Binding (Black Chromate)	2
L02	0E00792A	BT 2.6x6 ⊕Pan (Chromate)	4
L03	0E00854A	BT 2.6x4 ⊕Pan (Chromate)	2
C02	CA08485A	RS Mechanism Ass'y Serial No.: A80201001 -	1
01	CA08490A	Motor Holder Ass'y	1
02	0C08551A	Slide Cover	1
03	0C08099B	Cam Motor Belt	1
04	0C08525A	SD Pulley	1
05	CA08489A	S Slide Chassis Ass'y	1
06	0C08133A	Skeleton A Switch MSW-206	1
07	0B82074B	2P-H Connector	1
08	CA08488A	Main Chassis Ass'y	1
L01	0E00868A	BT 3x8 ⊕ Binding (Chromate)	4
L02	0E00958A	BT 2x3 ⊕ Binding (Black Chromate)	2
L03	0E00222A	E-Ring 2mm	1
L04	0C08594A	Mylar Washer 3x0.5	1
L05	0E00181A	E-Ring 3mm	4
L06	0C08593A	Mylar Washer 4x0.5	8
L07	0E00840A	BT 2x8 ⊕Pan (Chromate)	2

5.7. Mechanism Ass'y (D01)

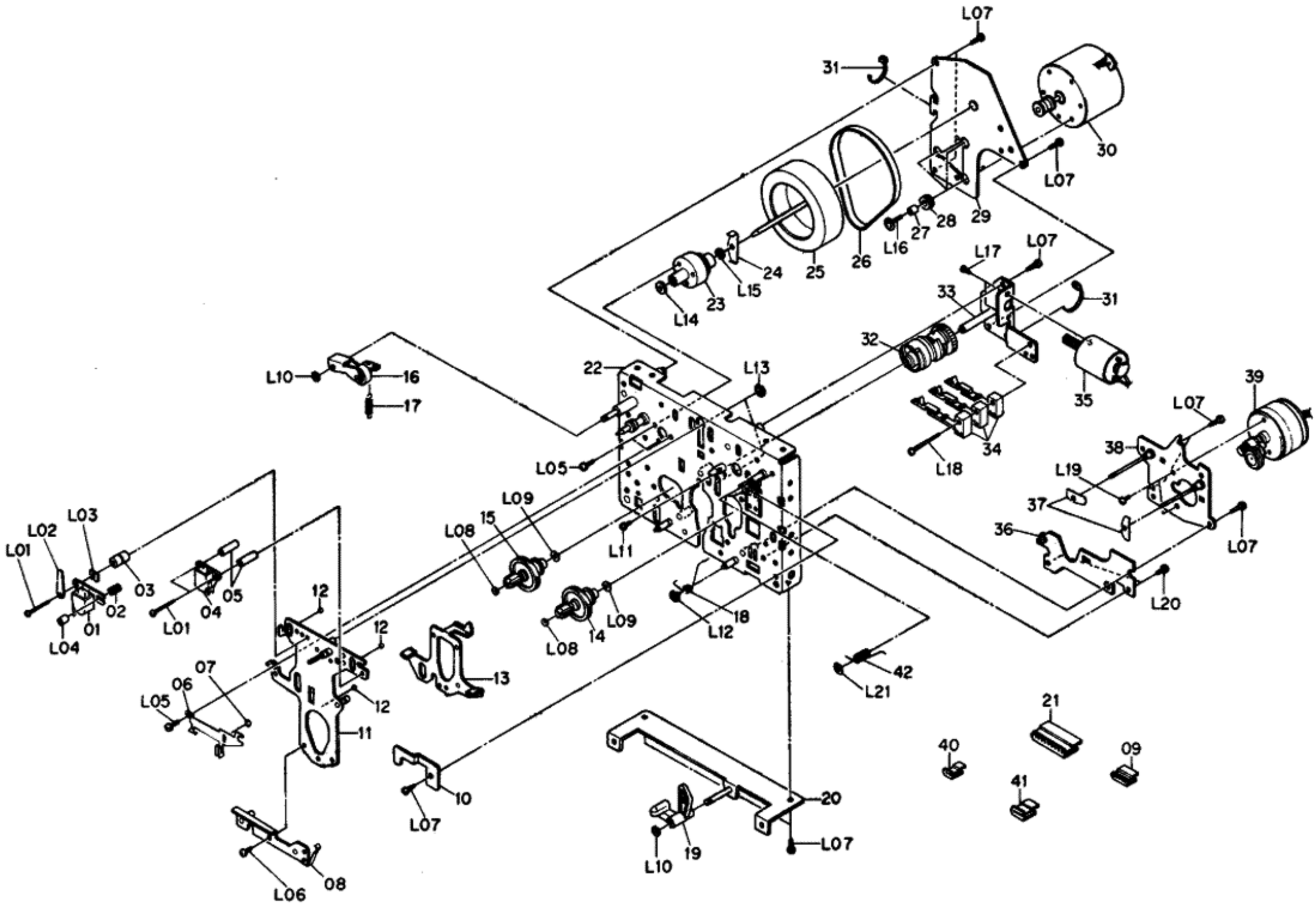

Fig. 5.7

Schematic Ref. No.	Part No.	Description	Q'ty	Schematic Ref. No.	Part No.	Description	Q'ty
D01	CA08482A	Mechanism Ass'y Serial No.: A80201001 -	1	32	0C80026A	Cam	1
				33	0C80028A	Control Motor Holder	1
				34	0C80027A	Mode Switch	3
01	0G01371A	Record/Playback Head RP-2G	1	35	CA80007A	Control Motor Ass'y	1
02	0C80001A	Azimuth Adjust Spring	1	36	CA80011A	Shut-off P.C.B. Ass'y	1
03	0C80045A	Record/Playback Head Collar	1	37	0C80029A	Back Tension Spring	2
04	0G01365A	Erase Head E-2D	1	38	0C80030A	Reel Motor Holder	1
05	0C80044A	Erase Head Collar	2	39	CA80008B	Reel Motor Ass'y	1
06	0C80003A	Head Base Hold Plate	1	40	0C80040A	2P-H Connector	1
07	0C80004A	Steel Ball 3mm	1	41	0C80041A	4P-H Connector	1
08	0C80386A	J Plate	1	42	0C80420A	Coil Spring	1
09	0C80043A	5P-H Connector	1	L01	0E03038A	M2x12 ⊕ Binding (Chromate)	3
10	0C80429A	Plate	1	L02	0E03053A	Wire Holder	1
11	0C80006A	Head Base	1	L03	0C80048A	Shim 0.03T	(1)
12	0C80007A	Steel Ball 2mm	3		0C80038A	Shim 0.06T	(1)
13	CA80002A	Brake Ass'y	1		0C80039A	Shim 0.1T	(1)
14	CA80004B	Supply Reel Hub Ass'y	1	L04	0C80046A	Azimuth Adjust Screw	1
15	CA80003B	Take-up Reel Hub Ass'y	1	L05	0E03046A	M2.6x6 ⊕ Pan (2A) (Chromate)	3
16	CA80005A	Pressure Roller Ass'y	1	L06	0E03040A	FT 2.5x3.5 ⊕ Pan (Chromate)	1
17	0C80008A	Pressure Roller Spring	1	L07	0E03042A	FT 2.5x5 ⊕ Pan (Chromate)	10
18	0C80016A	Brake Spring	1	L08	0E03049A	Washer 1.8mm	2
19	0C80388A	Cassette Hold Arm	1	L09	0E03050A	Washer 3.1mm	2
20	0C80385A	HA Plate	1	L10	0E00222A	E-Ring 2mm	2
21	0C80042A	9P-H Connector	1	L11	0E03036A	M2x4 ⊕ Pan (2A) (Chromate)	1
22	0C80390A	Mechanism Chassis	1	L12	0E00698A	E-Ring 2.5mm	1
23	0C80031A	Capstan Flange	1	L13	0E00181A	E-Ring 3mm	2
24	0C80428A	Hold Spring	1	L14	0E03051A	Washer 2.5mm	1
25	0C80033A	Flywheel	1	L15	0E00912A	Mylar Washer	1
26	0C80034A	Capstan Belt	1	L16	0E03047A	M2.6x9 ⊕ Pan (Chromate)	3
27	0C80035A	Sleeve	3	L17	0E00691A	M2x3 ⊕ Pan	2
28	0C80036A	Floating Rubber	3	L18	0E03044A	FT 2.5x20 ⊕ Pan (Chromate)	1
29	CA80009A	Flywheel Holder Ass'y	1	L19	0E03045A	M2.6x3 ⊕ Binding (Chromate)	2
30	CA80010A	Capstan Motor Ass'y	1	L20	0E03041A	FT 2.5x4 ⊕ Pan (Chromate)	2
31	0C80037A	Insu-Lock	3	L21	0C80421A	Washer	1

5.8. Motor Holder Ass'y (E01)

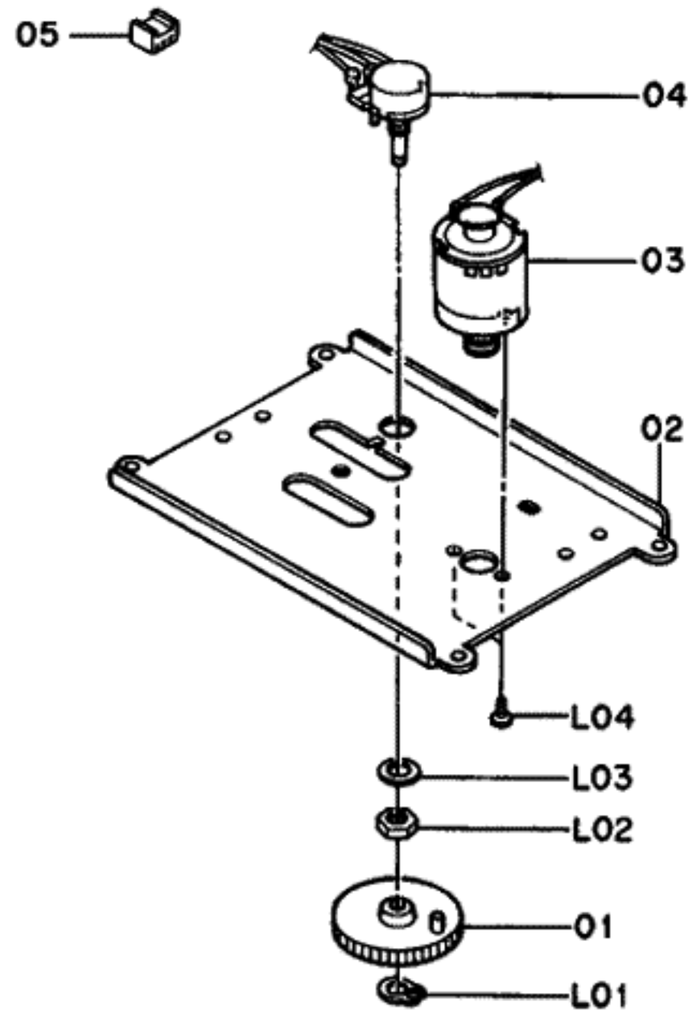

Fig. 5.8

5.10. Main Chassis Ass'y (E03)

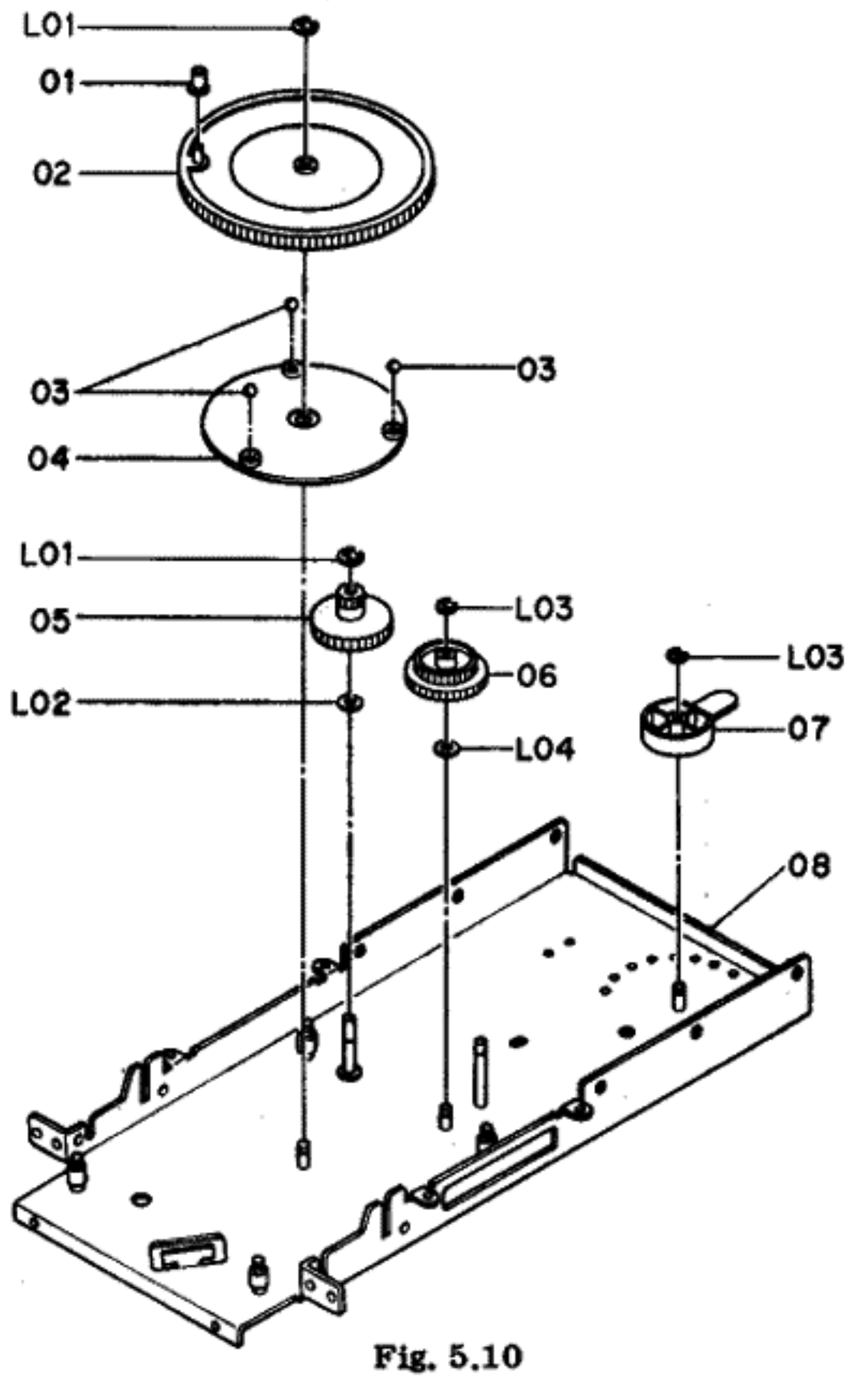

Fig. 5.10

Schematic Ref. No.	Part No.	Description	Q'ty
E01	**CA08490A**	**Motor Holder Ass'y** **Serial No.: A80201001 -**	**1**
01	0C08527A	PM Gear	1
02	0C08565B	Motor Holder	1
03	CA08495A	Drive Motor Ass'y	1
04	0B07240A	Volume 10K (B)	1
05	0B08784B	3P-H Connector	1
L01	0E00993A	Grip 6mm	1
L02	—	Nut for Volume	(1)
L03	—	Washer for Volume	(1)
L04	0E00120A	M2.6x3 ⊕ Pan (Chromate)	2

5.9. S Slide Chassis Ass'y (E02)

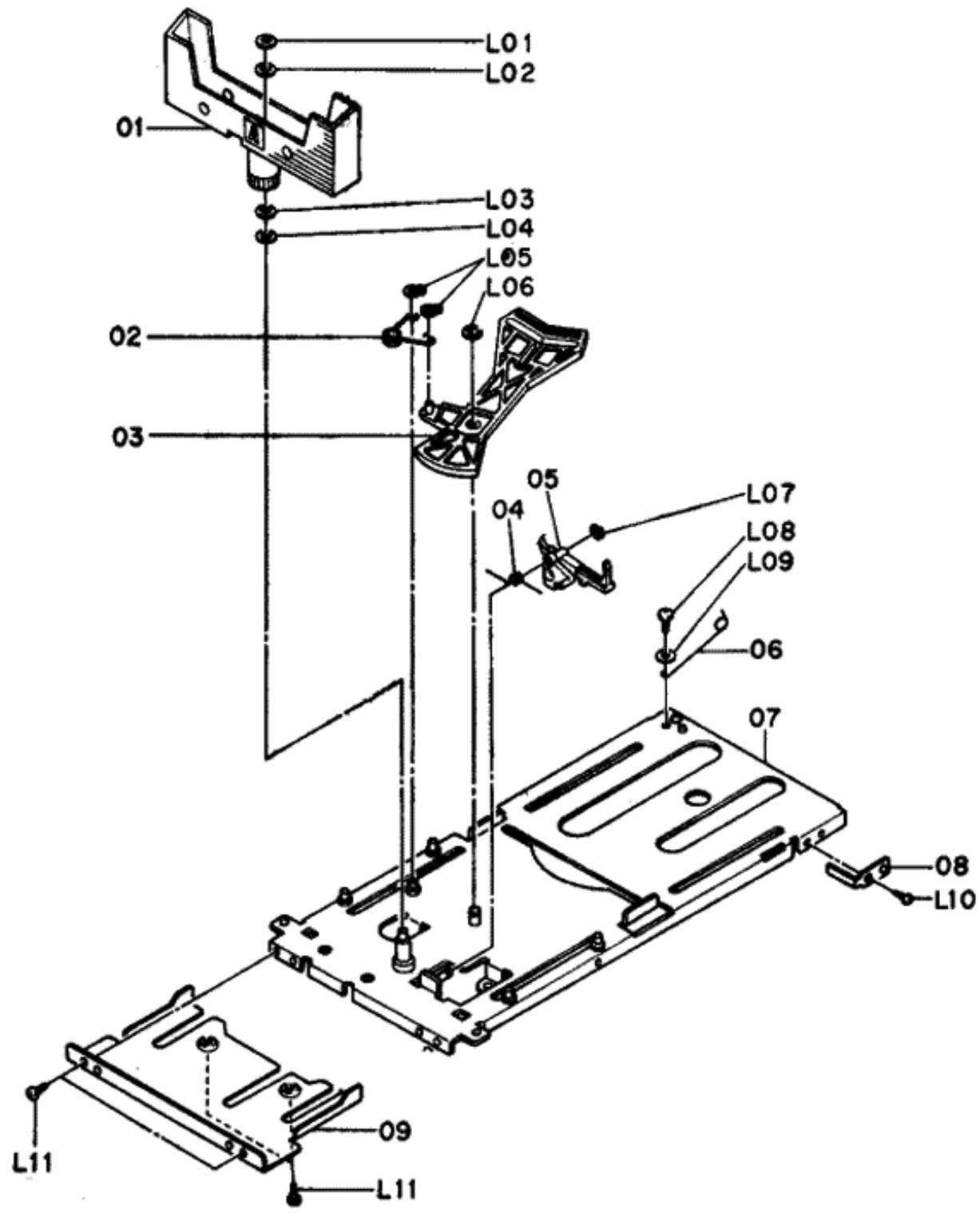

Fig. 5.9

Schematic Ref. No.	Part No.	Description	Q'ty
E02	**CA08489A**	**S Slide Chassis Ass'y** **Serial No.: A80201001 -**	**1**
01	CA08494A	S Cassette Case Ass'y	1
02	0C08548A	R Arm Spring	1
03	0C08529A	R Arm	1
04	0C08547A	Skeleton Switch Spring	1
05	CA08493A	Skeleton Switch Ass'y	1
06	0C08596A	WH Rod	1
07	CA08475B	Slide Chassis Sub Ass'y	1
08	0C08598A	SS Plate	1
09	0C08552A	Under Cover	1
L01	0E00252A	Washer CS 3mm	1
L02	0E00254A	Mylar Washer 3.1x7x0.2	1
L03	0C08347A	Mylar Washer 3.1mm	1
L04	0C08594A	Mylar Washer 3x0.5	1
L05	0E00837A	Grip 3mm	2
L06	0E00181A	E-Ring 3mm	1
L07	0E00042A	E-Ring 1.5mm	1
L08	0E00857A	BT 3x6 ⊕ Binding (Chromate)	1
L09	0E00637A	Washer 3.3x7x0.5	1
L10	0E00958A	BT 2x3 ⊕ Binding (Black Chromate)	1
L11	0E03133A	BT 2.6x4 ⊕ Binding (Black Chromate)	4
E03	**CA08488A**	**Main Chassis Ass'y** **Serial No.: A80201001 -**	**1**
01	0C08584A	Collar	1
02	0C08523A	Main Gear	1
03	0C08550A	Ball 4mm	3
04	0C08528A	Retainer	1
05	0C08526A	PMD Gear	1
06	0C08524A	SD Gear	1
07	0C08543A	SS Cam	1
08	CA08474C	Main Chassis Sub Ass'y	1
L01	0E00181A	E-Ring 3mm	2
L02	0C08593A	Mylar Washer 4x0.5	1
L03	0E00222A	E-Ring 2mm	2
L04	0C08594A	Mylar Washer 3x0.5	1

6. MOUNTING DIAGRAMS AND PARTS LIST

Notes: 1. Mounting diagram shows a dip side view of the printed circuit board.
2. Diode is 1SS53, 1S1555, or 1SS176 unless otherwise specified.
3. Following transistors are interchangeable with each other.
a. 2SA733, 2SA608SP, 2SA1048, 2SA1175
b. 2SC945, 2SC536SP, 2SC2458, 2SC2785
4. Abbreviation for part name:
TR — Transistor, SiD — Silicon Diode, GD — Germanium Diode, ZD — Zener Diode
RK — Carbon Resistor, RM — Metal Film Resistor, RF — Fail Safe Type Resistor, RC — Cement Resistor, RW — Wire Wound Resistor
CE — Electrolytic Capacitor, CM — Mylar Capacitor, CC — Ceramic Capacitor, CP — PP Capacitor, CT — Tantalum Capacitor, CM — Film Capacitor, C — Mica Capacitor

6.1. Power Switch P.C.B. Ass'y

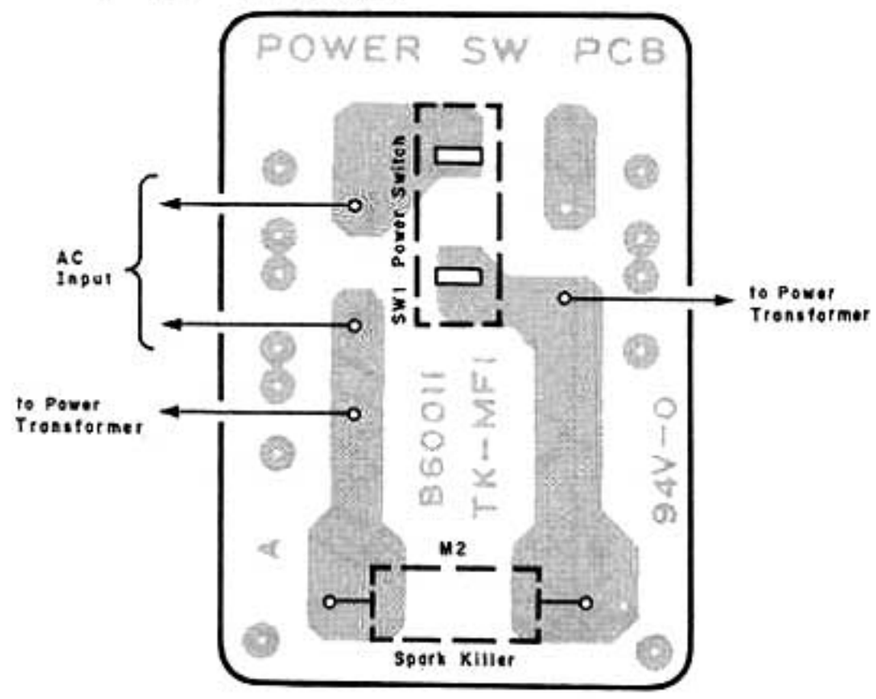

Fig. 6.1

6.2. Shut-off P.C.B. Ass'y

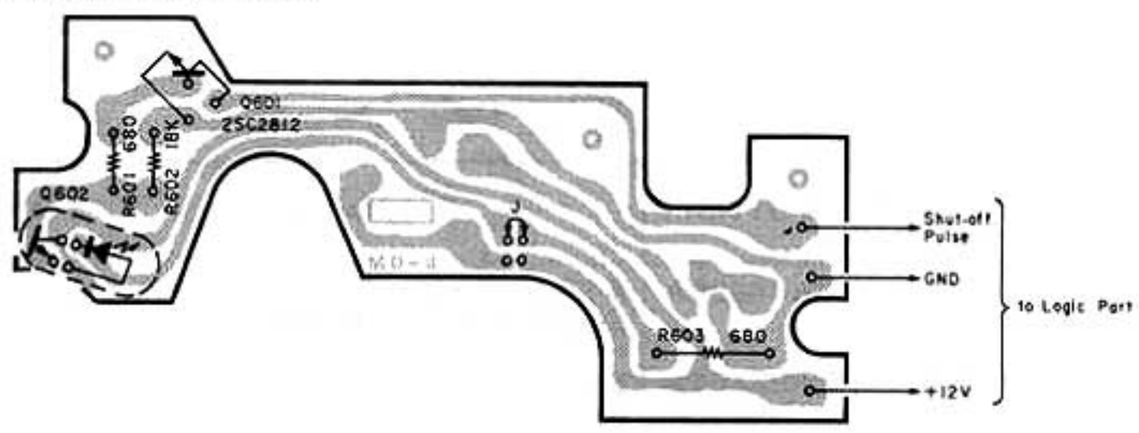

Fig. 6.2

6.3. Lid Lamp P.C.B. Ass'y

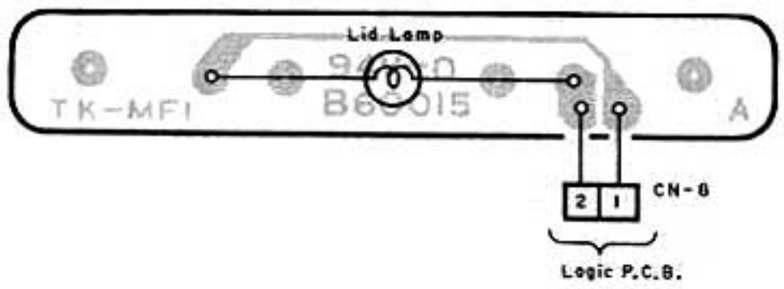

Fig. 6.3

6.4. Eject Switch P.C.B. Ass'y

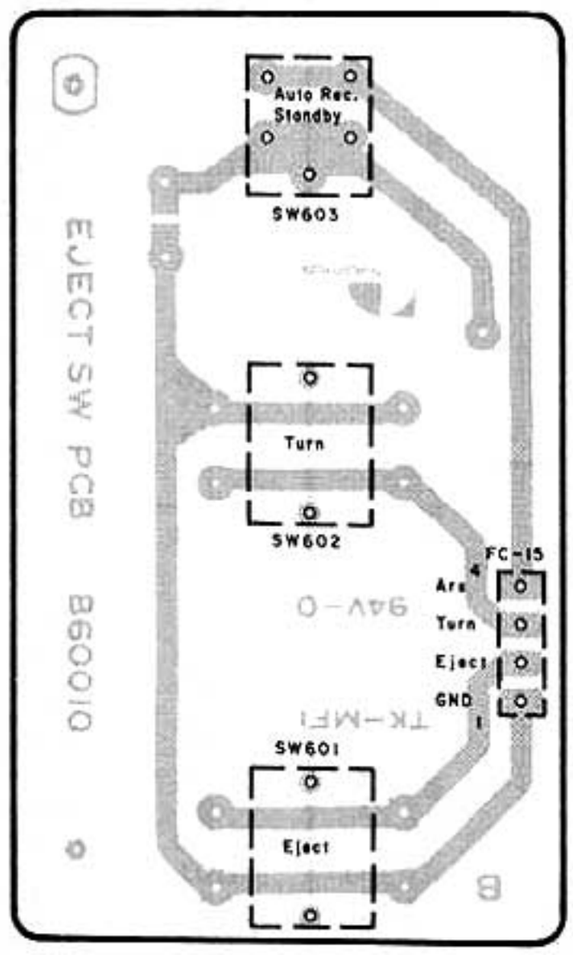

Fig. 6.4

Schematic Ref. No.	Part No.	Description
	BA05017A	Power Switch P.C.B. Ass'y (RX202 (U.S.A. & Canada))
	BA05016A	Power Switch P.C.B. Ass'y (RX202 (Japan))
	BA05018A	Power Switch P.C.B. Ass'y (RX202 (Others & Australia) & RX202E))
SW1	0B60011A	Power Switch P.C.B.
	0B70002A	Power Switch SDL1P (1)
	0E00612A	M3x6 ⊕Pan (2A) (2)
	0E00752A	Eyelet 2x3 (2)
	0J04741A	Power Switch Holder (1)
	0B08342A	Spark Killer (1) (RX202 (U.S.A. & Canada))
	0B08363A	Sparak Killer (1) (RX202 (Japan))
	0B08955A	Spark Killer (1) (RX202 (Others & Australia) & RX202E))
	CA80011A	Shut-off P.C.B. Ass'y
	0C80047A	Shut-off P.C.B.
Q601	0B06388A	TR 2SC2812
Q602	0B06389A	Photo Reflector NJL5141
R601,603	0B09840A	RK 680 Leadless
R602	0B09841A	RK 18K Leadless
	BA05014A	Lid Lamp P.C.B. Ass'y
	0B60015A	Lid Lamp P.C.B.
	0B82152A	2P-H Connector (1)
	0B90010A	Lamp 12V 70mA (1)
	0J04738A	Lamp Holder (1)
	BA05013A	Eject Switch P.C.B. Ass'y
	0B60010B	Eject Switch P.C.B.
	0B07219A	Switch AKC8S (2)
	0B70004A	Touch Switch 4.3mm (1)

6.5. Tape Switch P.C.B. Ass'y

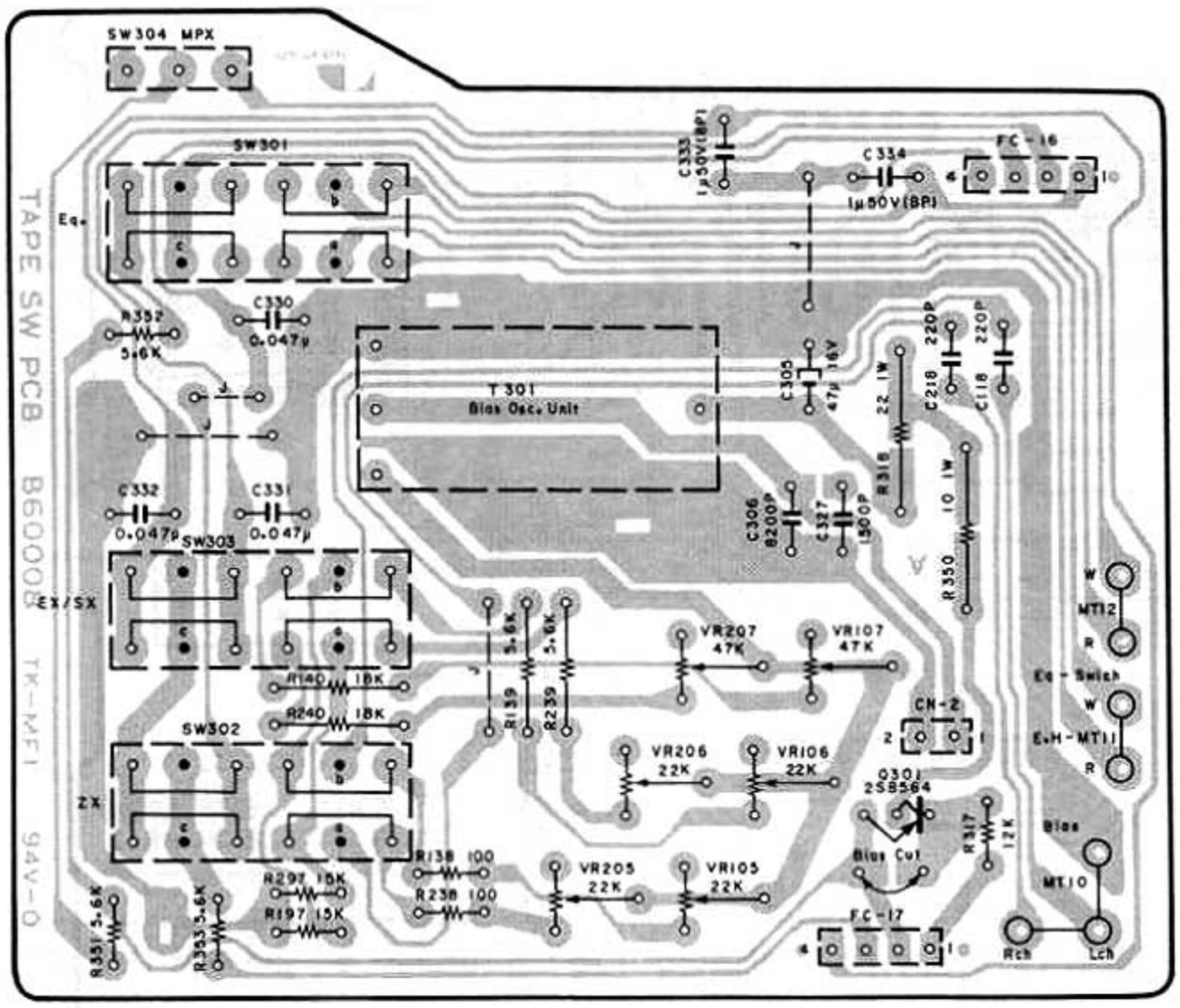

Fig. 6.5

6.6. Volume P.C.B. Ass'y

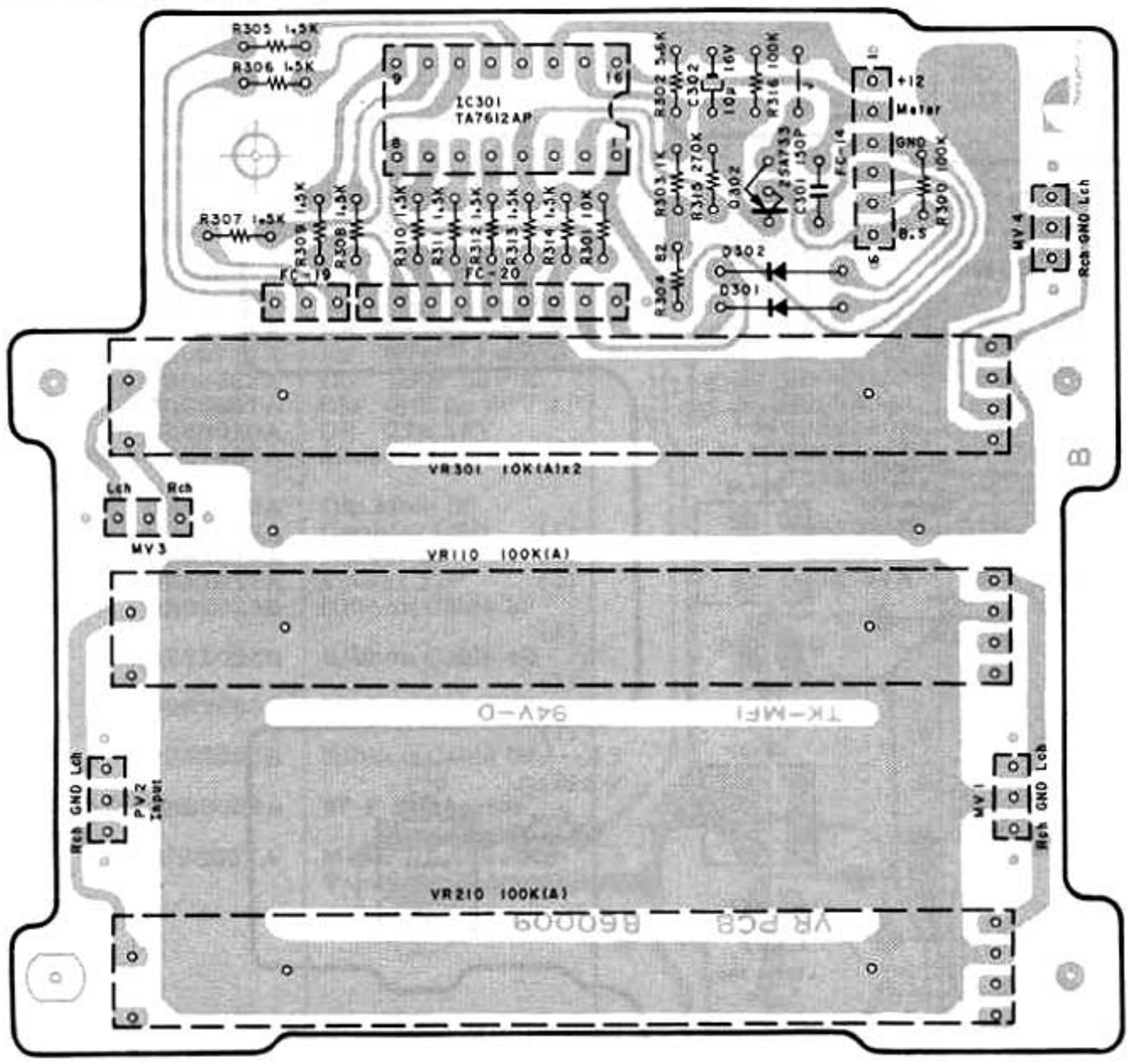

Fig. 6.6

Schematic Ref. No.	Part No.	Description
	BA05006A	Tape Switch P.C.B. Ass'y
	0B60008A	Tape Switch P.C.B.
Q301	0B06332A	TR 2SB564M
T301	0B06688C	Bias Osc. Unit
VR105,106 205,206	0B32009A	Semi-fixed VR 22K
VR107,207	0B32010A	Semi-fixed VR 47K
R138,238	0B09653A	RK 100 1/6W J
R139,239	0B01887A	RK 5.6K 1/4W J
R140,240	0B05560A	RK 18K 1/4W J
R197,297	0B09705A	RK 15K 1/6W J
R317	0B09263A	RK 12K 1/4W J
R318	0B09831A	RF 22 1W J
R350	0B09837A	RF 10 1W J
R351,352 353	0B09695A	RK 5.6K 1/6W J
C118,218	0B09283A	CC 220P 50V K
C305	0B01403A	CE 47μ 16V
C306	0B09828A	CP 8200P 100V J
C327	0B41229A	CP 1500P 100V J
C330,331 332	0B05796A	CM 0.047μ 50V J
C333,334	0B09187A	CE 1μ 50V (BP)
CN2	0B02233A	2P-T Post
FC16,17	0B81011A	Dip Mate 4P
SW302-304	0B70005A	Push Switch (1)
	0J04743A	Push Switch Plate (1)
	BA05008A	Volume P.C.B. Ass'y
	0B60009B	Volume P.C.B.
IC301	0B06369A	IC TA7612AP
Q302	0B06013A	TR 2SA733 (P,Q)
D301,302	0B01909A	SiD 1S1555
VR110,210	0B31002A	Slide Volume 100K (A)
VR301	0B31001A	Slide Volume 10K (A)x2
R300,316	0B09725A	RK 100K 1/6W J
R301	0B09701A	RK 10K 1/6W J
R302	0B09695A	RK 5.6K 1/6W J
R303	0B09677A	RK 1K 1/6W J
R304	0B09651A	RK 82 1/6W J
R305-314	0B09681A	RK 1.5K 1/6W J (10)
R315	0B09735A	RK 270K 1/6W J
C301	0B09281A	CC 150P 50V K
C302	0B01412A	CE 10μ 16V
FC19,20	0B02356A	JP Connector 12P
	0B81010A	Dip Mate 3P (4)
	0B81013A	Dip Mate 6P (1)

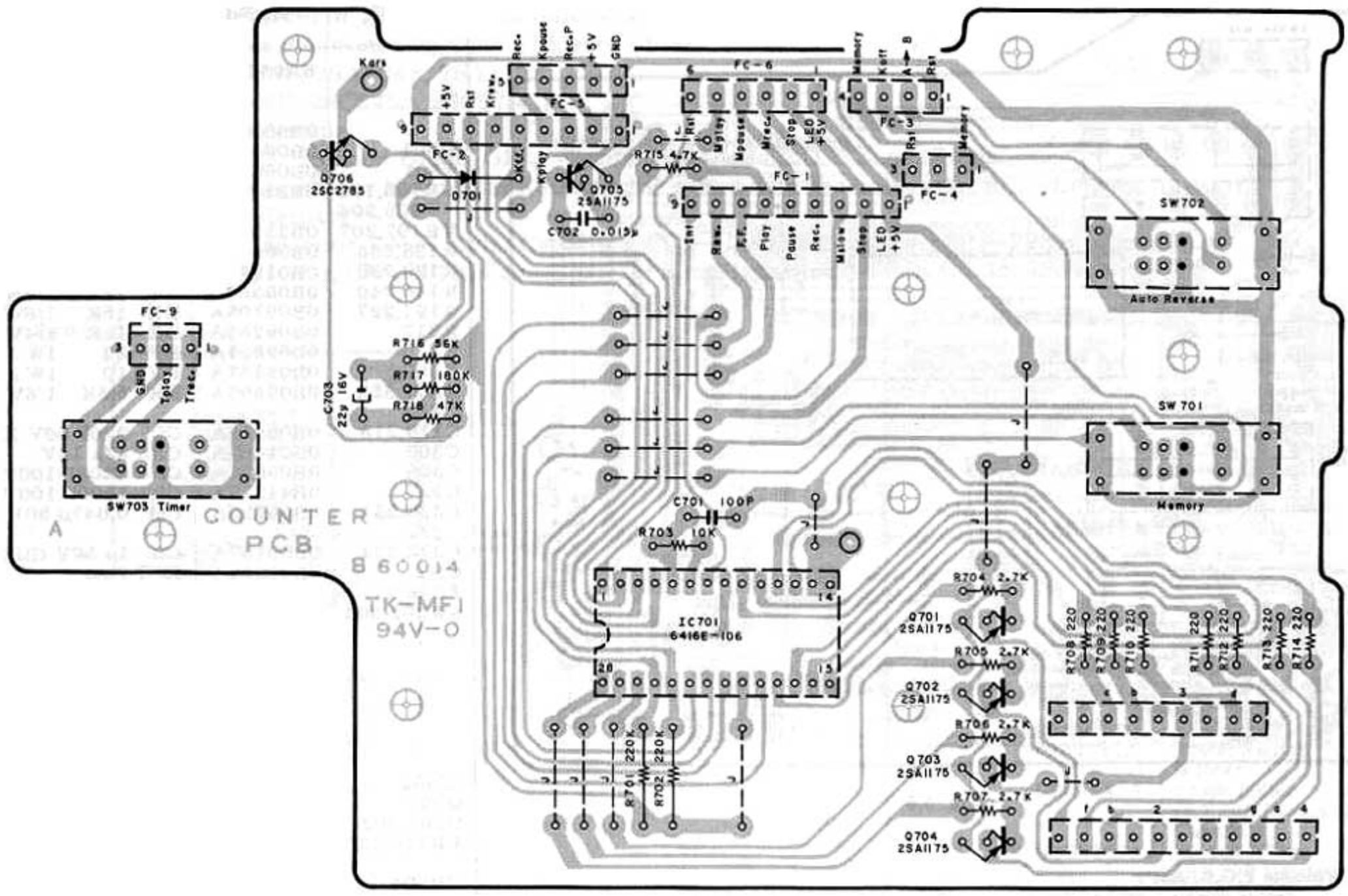

Fig. 6.7

. **Control Switch P.C.B. Ass'y**

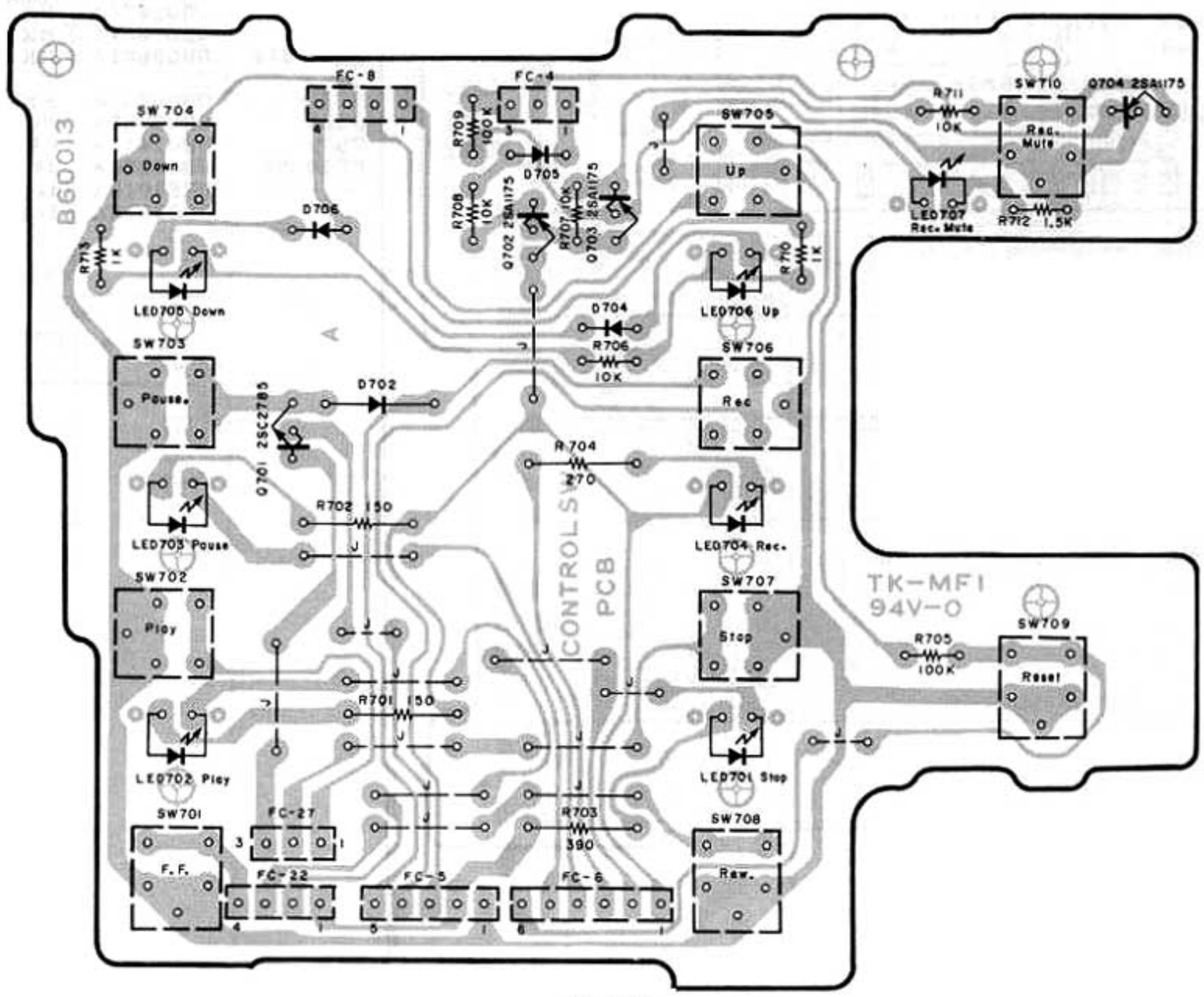

Fig. 6.8

6.9. Fader P.C.B. Ass'y

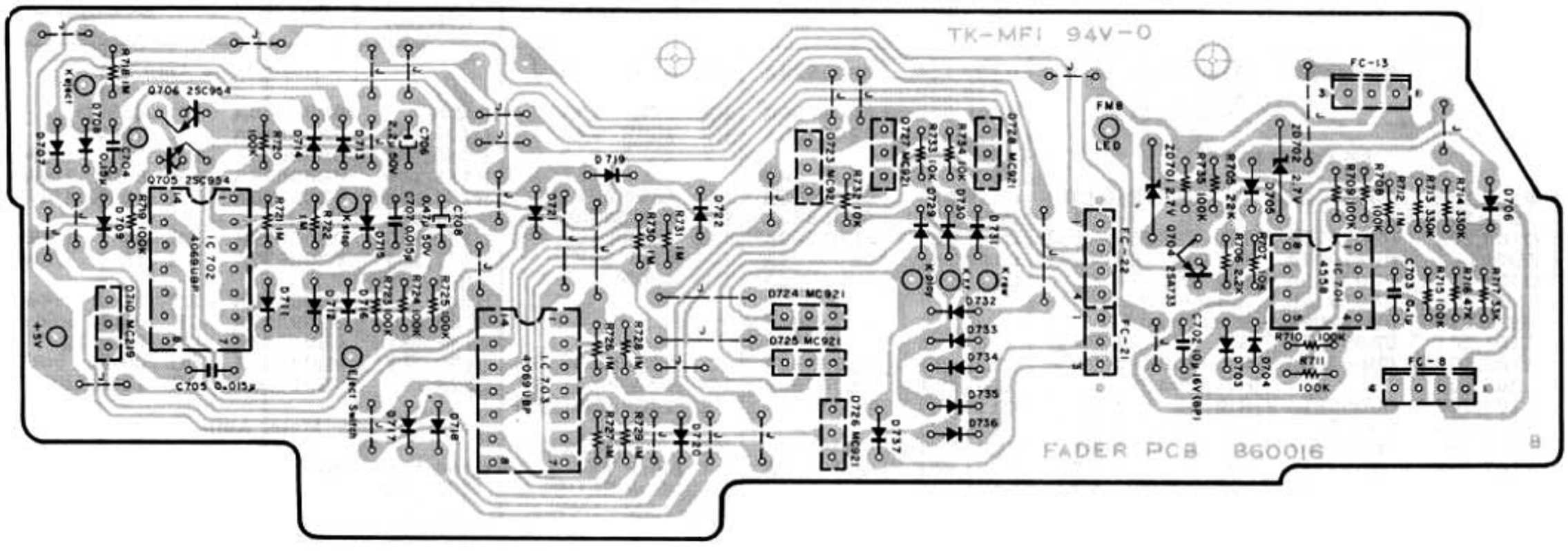

Fig. 6.9

Schematic Ref. No.	Part No.	Description
	BA05007A	Counter P.C.B. Ass'y
	0B60014A	Counter P.C.B.
IC701	0B06368A	IC LM6416E-106
Q701,702 703,704 705	0B06455A	TR 2SA1175
Q706	0B06456A	TR 2SC2785
D701	0B06181A	SiD 1SS53
R701,702	0B05625A	RK 220K 1/4W J
R703	0B09701A	RK 10K 1/6W J
R704,705 706,707	0B09687A	RK 2.7K 1/6W J
R708-714	0B09661A	RK 220 1/6W J (7)
R715	0B09693A	RK 4.7K 1/6W J
R716	0B09719A	RK 56K 1/6W J
R717	0B09731A	RK 180K 1/6W J
R718	0B09717A	RK 47K 1/6W J
C701	0B09282A	CC 100P 50V K
C702	0B05557A	CM 0.015μ 50V J
C703	0B40010A	CE 22μ 16V
SW701,702 703	0B07437A	Slide Switch 2-3
FC4	0B81010A	Dip Mate 3P
	0B12098A	Counter LED (1)
	0B81016A	Socket 9P (1)
	0B81017A	Socket 11P (1)
	0B82093B	Ribbon Cable 3P (1)
	0B82094B	Ribbon Cable 4P (1)
	0B82095B	Ribbon Cable 3P (1)
	0B82097B	Ribbon Cable 6P (1)
	0B82098A	9P-F Connector (1)
	0J04627A	Meter IC Adhesive Tape (1)

Schematic Ref. No.	Part No.	Description
	BA05012A	Control Switch P.C.B. Ass'y
	0B60013A	Control Switch P.C.B.
Q701	0B06456A	TR 2SC2785
Q702,703 704	0B06455A	TR 2SA1175
D702	0B06181A	SiD 1SS53
D704,705 706	0B06398A	SiD 1SS176
R701,702	0B05795A	RK 150 1/4W J
R703	0B05691A	RK 390 1/4W J
R704	0B05645A	RK 270 1/4W J
R705,709	0B09725A	RK 100K 1/6W J
R706,707 708,711	0B09701A	RK 10K 1/6W J
R710,713	0B09677A	RK 1K 1/6W J
R712	0B09681A	RK 1.5K 1/6W J
SW701-710	0B70004A	Switch 4.3mm
	0B06333A	LED (RED) (4)
	0B06334A	LED (GRN) (3)
	0B82080B	5P Flat Cable (1)
	0B82081B	6P Flat Cable (1)
	0B82090B	Ribbon Cable 4P (1)
	0B82095B	Ribbon Cable 3P (1)
	0J04744A	LED Reflector (7)

Schematic Ref. No.	Part No.	Description
	BA05015A	Fader P.C.B. Ass'y
	0B60016B	Fader P.C.B.
IC701	0B11026A	IC TL092
IC702,703	0B06270A	IC TC4069UBP
Q704	0B06013A	TR 2SA733 (P,Q)
Q705,706	0B06100A	TR 2SC945A (K,P,Q)
ZD701,702	0B06191A	ZD 2.7V RD2.7E
D703-709 711-722 729-737	0B06398A	SiD 1SS176 (28)
D710 723-728	0B12100A	Double Diode MC921 (7)
R705	0B09709A	RK 22K 1/6W J
R706	0B09685A	RK 2.2K 1/6W J
R707,732 733,734	0B09701A	RK 10K 1/6W J
R708,709 710,711 715,719 720,723 724,725 735	0B09725A	RK 100K 1/6W J
R712,718 721,722 726,727 728,729 730,731	0B09749A	RK 1M 1/6W J
R713,714	0B09737A	RK 330K 1/6W J
R716	0B09717A	RK 47K 1/6W J
R717	0B09713A	RK 33K 1/6W J
C702	0B09163A	CE 10μ 16V (BP)
C703	0B09868A	CF 0.1μ 50V J
C704	0B09870A	CF 0.15μ 50V J
C705,707	0B05557A	CM 0.015μ 50V J
C706	0B09372A	CE 2.2μ 50V
C708	0B09222A	CE 0.47μ 50V (LN)
FC8	0B81011A	Dip Mate 4P
FC13	0B81010A	Dip Mate 3P
	0B02352A	7P JP Connector (1)
	0B82089B	Ribbon Cable 3P (1)
	0B82147B	Ribbon Cable 4P (1)
	0B82148B	Ribbon Cable 3P (1)

Schematic Ref. No.	Part No.	Description
	BA04999A	Main P.C.B. Ass'y Serial No.: A80205051 -
	— PB Eq. Amp. —	
Q101,102 201,202	0B06142A	TR 2SC2240 (BL)
Q103,203	0B01872A	TR 2SC945L (P,Q)
ZD301	0B12009A	ZD 10V RD10JB2T
D304	0B01909A	SiD 1S1555
L101,201	0B03919B	Inductor 36mH
VR101,201	0B32009A	Semi-fixed VR 22K
R101,201	0B09741A	RK 470K 1/6W J
R102,103 202,203	0B09330A	RK 100K 1/4W J (Noiseless)
R104,204	0B05631A	RK 82 1/4W J
R105,205	0B09731A	RK 180K 1/6W J
R106,206	0B09685A	RK 2.2K 1/6W J
R107,207	0B09711A	RK 27K 1/6W J
R108,208	0B09830A	RM 4.87K 1/4W F
R109,209	0B09829A	RM 3.32K 1/4W F
R110,210	0B09673A	RK 680 1/6W J
R111,211	0B01888A	RK 10K 1/4W J
R112,212	0B09703A	RK 12K 1/6W J
R195,295	0B09677A	RK 1K 1/6W J
R319	0B01857A	RK 1K 1/4W J
R357	0B09725A	RK 100K 1/6W J
C102,202	0B09932A	CE 22μ 16V K (LN)
C103,203	0B09283A	CC 220P 50V K
C104,204	0B01403A	CE 47μ 16V
C105,205	0B01863A	CE 3.3μ 50V
C106,206	0B05832A	CM 0.018μ 50V J
C107,207	0B41002A	CP 390P 100V J
C108,208	0B05550A	CM 1000P 50V J
C304	0B09868A	CF 0.1μ 50V J
C307	0B01400A	CE 100μ 16V
RL301	0B90011A	DS Relay
CN1	0B02242A	4P-T Post
	— Rec. Eq. Amp. —	
IC303	0B06387A	IC 2043DD
Q104,204	0B06299A	TR 2SC2878
L102,202	0B00068A	Trap Coil 10.5mH
L103,203	0B06696A	L-C Block
R113,213	0B09711A	RK 27K 1/6W J
R114,214 358	0B09701A	RK 10K 1/6W J
R115,116 117,215 216,217	0B09725A	RK 100K 1/6W J
R118,218	0B09677A	RK 1K 1/6W J
R119,219	0B09731A	RK 180K 1/6W J
R120,220	0B09691A	RK 3.9K 1/6W J
R121,221	0B09665A	RK 330 1/6W J
R122,222	0B09669A	RK 470 1/6W J
R123,223	0B09715A	RK 39K 1/6W J
R125,225	0B22324A	RM 6.8K 1/6W F
R126,226	0B09629A	RK 10 1/6W J
R153,253	0B09741A	RK 470K 1/6W J
C110,210	0B01804A	CM 3900P 50V J
C111,211	0B40178A	CE 0.47μ 50V
C112,212	0B01862A	CE 22μ 16V
C114,214	0B05659A	CM 5600P 50V J
C115,215	0B09961A	TF 5100P 50V J
C116,216	0B01412A	CE 10μ 16V
C117,217	0B09866A	TF 0.068μ 50V J
C160,260	0B09280A	CC 47P 50V J
C161,261 303	0B09187A	CE 1μ 50V (BP)
C171,271	0B05653A	CM 1500P 50V J
	— Rec. Level —	
IC305	0B11027A	IC TC9145P
Q112,212	0B01872A	TR 2SC945L (P,Q)
VR102,202	0B32009A	Semi-fixed VR 22K
VR103,104 203,204	0B32008A	Semi-fixed VR 10K
R127,227	0B09705A	RK 15K 1/6W J
R128,228	0B22327A	RM 7.15K 1/4W F
R129,229	0B09699A	RK 8.2K 1/6W J
R130,131 230,231	0B01888A	RK 10K 1/4W J
R132,135 137,232 235,237	0B09701A	RK 10K 1/6W J

Schematic Ref. No.	Part No.	Description
R133,136 233,236	0B05629A	RK 2.7K 1/4W J
R198,298	0B09709A	RK 22K 1/6W J
R354,355 356,363 364	0B09725A	RK 100K 1/6W J
C119,219	0B05571A	CM 680P 50V J
C120,220	0B05843A	CM 0.012μ 50V J
C121,221	0B05659A	CM 5600P 50V J
C122,222	0B09993A	CM 820P 50V J
C123,223	0B01913A	CM 1800P 50V J
	— Dolby NR —	
IC101,201	0B06383A	IC TEA0654
IC102,202	0B06382A	IC TEA0652
Q110,111 210,211	0B01872A	TR 2SC945L (P,Q)
ZD102,202	0B06167A	ZD 6.2V RD6.2EB3
L104,204	0B06691A	L-C Block YEL
L105,205	0B06690A	L-C Block BLUE
R154,193 254,293	0B05671A	RK 2.2M 1/4W J
R173,273	0B09687A	RK 2.7K 1/6W J
R174,274	0B09688A	RK 3K 1/6W J
R175,275	0B09686A	RK 2.4K 1/6W J
R176,276	0B22286A	RM 3.30K 1/4W F
R178,278	0B22229A	RM 1.00K 1/4W F
R180,280	0B09721A	RK 68K 1/6W J
R181,281	0B22309A	RM 5.10K 1/4W F
R182,282	0B22265A	RM 2.20K 1/4W F
R184,284	0B22305A	RM 4.70K 1/4W F
R185,285	0B09717A	RK 47K 1/6W J
R186,286	0B09722A	RK 75K 1/6W J
R187,190 287,290	0B09737A	RK 330K 1/6W J
R188,189 288,289	0B09739A	RK 390K 1/6W J
R191,291	0B09796A	RM 12K 1/4W F
R192,194 292,294	0B09709A	RK 22K 1/6W J
R196,296	0B09723A	RK 82K 1/6W J
R340,358 359	0B09725A	RK 100K 1/6W J
R341	0B01682A	RK 6.8K 1/4W J
R361,365	0B09677A	RK 1K 1/6W J
R362	0B01857A	RK 1K 1/4W J
R501,502	0B09733A	RK 220K 1/6W J
R502,602	0B01679A	RK 100 1/4W J
C132,134 232,234	0B09223A	CE 1μ 50V (LN)
C135,235	0B09312A	CP 0.01μ 100V G
C136,236	0B09240A	CP 0.033μ 100V G
C137,237	0B05652A	CM 4700P 50V J
C138,140 154,238 240,254 321	0B01412A	CE 10μ 16V
C139,239	0B09280A	CC 47P 50V J
C141,241	0B09864A	CF 0.047μ 50V J
C142,148 242,248	0B09862A	CF 0.033μ 50V J
C143,147 243,247	0B09868A	CF 0.1μ 50V J
C144,244 320	0B09570A	CE 0.15μ 50V (LN)
C145,245	0B09866A	CF 0.068μ 50V J
C149,249	0B09872A	CF 0.22μ 50V J
C150,250	0B09189A	CM 2700P 50V J
C151,251	0B05687A	CM 1200P 50V J
C152,252	0B40054A	CE 2200μ 6.3V
C153,253	0B09191A	CP 4700P 100V G
C172,272	0B01400A	CE 100μ 16V
C501,601	0B01288A	CC 100P 50V M
SW305,306	0B70006A	Push Switch 2KEY
Cds301	0B06325B	Photocoupler MCD7214F
	— Line Amp. —	
IC302	0B06146A	IC 4558DD
D306	0B06398A	SiD 1SS176
R152,252	0B09677A	RK 1K 1/6W J
R162,262	0B09709A	RK 22K 1/6W J
R163,263	0B09702A	RK 11K 1/6W J
C127,227	0B09251A	CE 33μ 25V
C129,229	0B09932A	CE 22μ 16V K (LN)

Schematic Ref. No.	Part No.	Description
	— Headphone Amp. —	
IC304	0B06370A	IC 4556D
Q108,208	0B06299A	TR 2SC2878
R165,265	0B09685A	RK 2.2K 1/6W J
R166,266	0B09697A	RK 6.8K 1/6W J
R167,168 267,268	0B09725A	RK 100K 1/6W J
R170,270	0B05579A	RK 22 1/4W J
R171,199 271,299	0B09677A	RK 1K 1/6W J
R342	0B09049A	RF 22 1/4W J
C130,230	0B09327A	CE 0.33μ 50V (LN)
C131,231	0B01398A	CE 220μ 16V
C170,270	0B09291A	CC 0.022μ 50V Z
C323	0B01400A	CE 100μ 16V
	— Meter Amp. —	
Q105,106 107,205 206,207	0B01872A	TR 2SC945L (P,Q)
ZD101,201	0B12101A	ZD 5V 5C-1
D101,201	0B06398A	SiD 1SS176
D102,202 305	0B06181A	SiD 1SS53
VR108,208	0B32011A	Semi-fixed VR 100K
R141,241	0B09713A	RK 33K 1/6W J
R142,242	0B01889A	RK 100K 1/4W J
R143,243	0B09743A	RK 560K 1/6W J
R144,244	0B09729A	RK 150K 1/6W J
R145,146 245,246	0B09725A	RK 100K 1/6W J
R147,148 247,248	0B09719A	RK 56K 1/6W J
R149,249	0B09709A	RK 22K 1/6W J
R320	0B09216A	RF 10 1/4W J
C124,224	0B09570A	CE 0.15μ 50V (LN)
C125,225	0B09148A	CE 10μ 25V (LN)
C308	0B01400A	CE 100μ 16V
	— Miscellaneous —	
	0B60007B	Main P.C.B.
	0B02348A	JP Connector 3P (1)
	0B02349A	JP Connector 4P (1)
	0B81011A	Dip Mate 4P (3)
	0B81012A	Dip Mate 5P (2)
	0B81013A	Dip Mate 6P (3)
	0B82082B	Ribbon Cable 4P (1)
	0B82083B	Ribbon Cable 6P (3)
	0B82084B	Ribbon Cable 5P (1)
	0B82085B	Ribbon Cable 4P (2)
	0J04743A	Push Switch Plate (1)

6.10. Main P.C.B. Ass'y

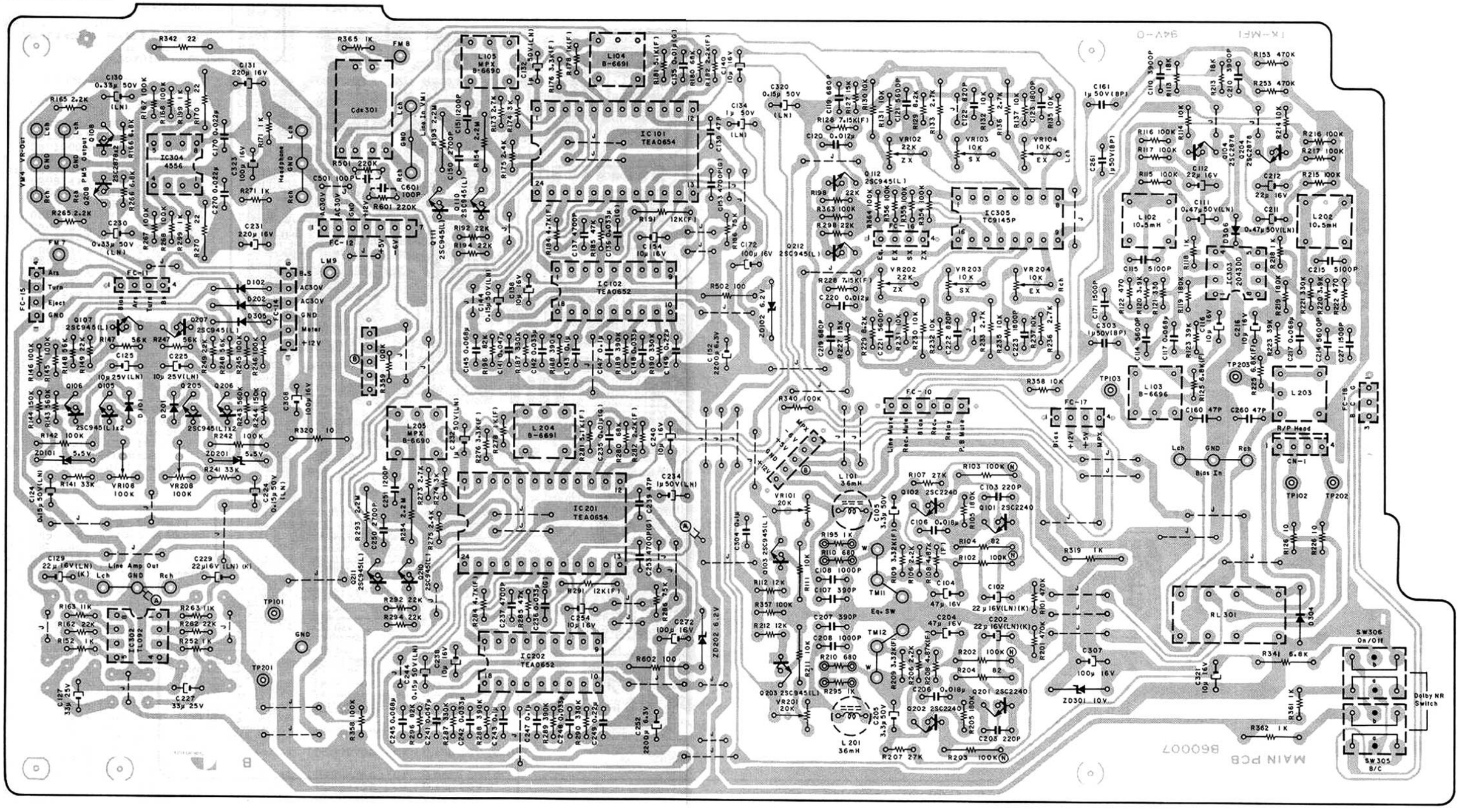

Fig. 6.10.] Serial No.: A80205051—

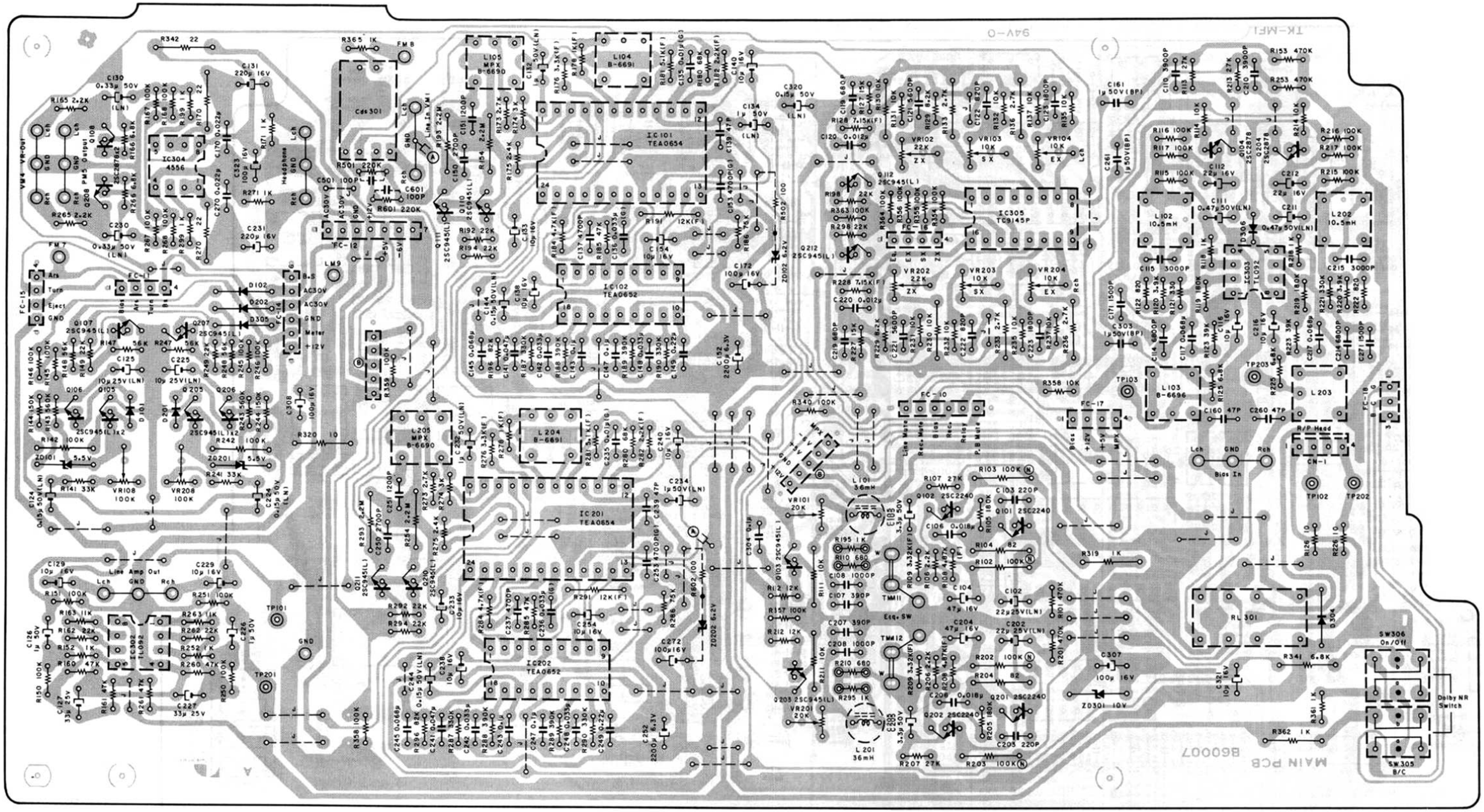

Fig. 6.10.2 Serial Nos.: A80201001 — A80205050

Schematic Ref. No.	Part No.	Description
	BA04999A	Main P.C.B. Ass'y Serial Nos. A80201001 - 05050
	— PB Eq. Amp. —	
Q101,102 201,202	0B06142A	TR 2SC2240 (BL)
Q103,203	0B01872A	TR 2SC945L (P,Q)
ZD301	0B12009A	ZD 10V RD10JB2T
D304	0B01909A	SiD 1S1555
L101,201	0B03919B	Inductor 36mH
VR101,201	0B32009A	Semi-fixed VR 22K
R101,201	0B09741A	RK 470K 1/6W J
R102,103 202,203	0B09330A	RK 100K 1/4W J (Noiseless)
R104,204	0B05631A	RK 82 1/4W J
R105,205	0B09731A	RK 180K 1/6W J
R106,206	0B09685A	RK 2.2K 1/6W J
R107,207	0B09711A	RK 27K 1/6W J
R108,208	0B09830A	RM 4.87K 1/4W F
R109,209	0B09829A	RM 3.32K 1/4W F
R110,210	0B09673A	RK 680 1/6W J
R111,211	0B01888A	RK 10K 1/4W J
R112,212	0B09703A	RK 12K 1/6W J
R195,295	0B09677A	RK 1K 1/6W J
R319	0B01857A	RK 1K 1/4W J
R357	0B09725A	RK 100K 1/6W J
C102,202	0B09137A	CE 22μ 25V (LN)
C103,203	0B09283A	CC 220P 50V K
C104,204	0B01403A	CE 47μ 16V
C105,205	0B01863A	CE 3.3μ 50V
C106,206	0B05832A	CM 0.018μ 50V J
C107,207	0B41002A	CP 390P 100V J
C108,208	0B05550A	CM 1000P 50V J
C304	0B09868A	CF 0.1μ 50V J
C307	0B01400A	CE 100μ 16V
RL301	0B90011A	DS Relay
CN1	0B02242A	4P-T Post
	— Rec. Eq. Amp. —	
IC303	0B11026A	IC TL092
Q104,204	0B06299A	TR 2SC2878
L102,202	0B00068A	Trap Coil 10.5mH
L103,203	0B06696A	L-C Block
R113,213	0B09711A	RK 27K 1/6W J
R114,214 358	0B09701A	RK 10K 1/6W J
R115,116 117,215 216,217	0B09725A	RK 100K 1/6W J
R118,218	0B09677A	RK 1K 1/6W J
R119,219	0B09731A	RK 180K 1/6W J
R120,220	0B09691A	RK 3.9K 1/6W J
R121,221	0B09665A	RK 330 1/6W J
R122,222	0B09675A	RK 820 1/6W J
R123,223	0B09715A	RK 39K 1/6W J
R125,225	0B09697A	RK 6.8K 1/6W J
R126,226	0B09629A	RK 10 1/6W J
R153,253	0B09741A	RK 470K 1/6W J
C110,210	0B01804A	CM 3900P 50V J
C111,211	0B40178A	CE 0.47μ 50V
C112,212	0B01862A	CE 22μ 16V
C114,214	0B05530A	CM 6800P 50V J
C115,215	0B09958A	TF 3000P 50V J
C116,216	0B01412A	CE 10μ 16V
C117,217	0B09866A	TF 0.068μ 50V J
C160,260	0B09280A	CC 47P 50V J
C161,261 303	0B09187A	CE 1μ 50V (BP)
C171,271	0B05653A	CM 1500P 50V J
	— Rec. Level —	
IC305	0B11027A	IC TC9145P
Q112,212	0B01872A	TR 2SC945L (P,Q)
VR102,202	0B32009A	Semi-fixed VR 22K
VR103,104 203,204	0B32008A	Semi-fixed VR 10K
R127,227	0B09705A	RK 15K 1/6W J
R128,228	0B22327A	RM 7.15K 1/4W F
R129,229	0B09699A	RK 8.2K 1/6W J
R130,131 230,231	0B01888A	RK 10K 1/4W J
R132,135 137,232 235,237	0B09701A	RK 10K 1/6W J
R133,136 233,236	0B05629A	RK 2.7K 1/4W J

Schematic Ref. No.	Part No.	Description
R198,298	0B09709	RK 22K 1/6W J
R354,355 356,363 364	0B09725A	RK 100K 1/6W J
C119,219	0B05571A	CM 680P 50V J
C120,220	0B05843A	CM 0.012μ 50V J
C121,221	0B05659A	CM 5600P 50V J
C122,222	0B09993A	CM 820P 50V J
C123,223	0B01913A	CM 1800P 50V J
	— Dolby NR —	
IC101,201	0B06383A	IC TEA0654
IC102,202	0B06382A	IC TEA0652
Q110,111 210,211	0B01872A	TR 2SC945L (P,Q)
ZD102,202	0B06167A	ZD6.2V RD6.2EB3
L104,204	0B06691A	L-C Block YEL
L105,205	0B06690A	L-C Block BLUE
R154,193 254,293	0B05671A	RK 2.2M 1/4W J
R173,273	0B09687A	RK 2.7K 1/6W J
R174,274	0B09688A	RK 3K 1/6W J
R175,275	0B09686A	RK 2.4K 1/6W J
R176,276	0B22286A	RM 3.30K 1/4W F
R178,278	0B22229A	RM 1.00K 1/4W F
R180,280	0B09721A	RK 68K 1/6W J
R181,281	0B22309A	RM 5.10K 1/4W F
R182,282	0B22265A	RM 2.20K 1/4W F
R184,284	0B22305A	RM 4.70K 1/4W F
R185,285	0B09717A	RK 47K 1/6W J
R186,286	0B09722A	RK 75K 1/6W J
R187,190 287,290	0B09737A	RK 330K 1/6W J
R188,189 288,289	0B09739A	RK 390K 1/6W J
R191,291	0B09796A	RM 12K 1/4W F
R192,194 292,294	0B09709A	RK 22K 1/6W J
R196,296	0B09723A	RK 82K 1/6W J
R340,358 359	0B09725A	RK 100K 1/6W J
R341	0B01682A	RK 6.8K 1/4W J
R361,365	0B09677A	RK 1K 1/6W J
R362	0B01857A	RK 1K 1/4W J
R501,502	0B09733A	RK 220K 1/6W J
R502,602	0B01679A	RK 100 1/4W J
C132,134 232,234	0B09223A	CE 1μ 50V (LN)
C133,138 140,154 233,238 240,254 321	0B01412A	CE 10μ 16V
C135,235	0B09312A	CP 0.01μ 100V G
C136,236	0B09240A	CP 0.033μ 100V G
C137,237	0B05652A	CM 4700P 50V J
C139,239	0B09280A	CC 47P 50V J
C141,241	0B09864A	CF 0.047μ 50V J
C142,148 242,248	0B09862A	CF 0.033μ 50V J
C143,147 243,247	0B09868A	CF 0.1μ 50V J
C144,244 320	0B09570A	CE 0.15μ 50V (LN)
C145,245	0B09866A	CF 0.068μ 50V J
C149,249	0B09872A	CF 0.22μ 50V J
C150,250	0B09189A	CM 2700P 50V J
C151,251	0B05687A	CM 1200P 50V J
C152,252	0B40054A	CE 2200μ 6.3V
C153,253	0B09191A	CP 4700P 100V G
C172,272	0B01400A	CE 100μ 16V
C501,601	0B01288A	CC 100P 50V M
SW305,306	0B70006A	Push Switch 2KEY
CdS301	0B06325B	Photocoupler MCD7214F
	— Line Amp. —	
IC302	0B11026A	IC TL092
D306	0B06398A	SiD 1SS176
R150,151 250,251	0B09725A	RK 100K 1/6W J
R152,252	0B09677A	RK 1K 1/6W J
R160,161 260,261	0B09717A	RK 47K 1/6W J
R162,262	0B09709A	RK 22K 1/6W J
R163,263	0B09702A	RK 11K 1/6W J
C126,226	0B01405A	CE 1μ 50V

Schematic Ref. No.	Part No.	Description
C127,227	0B09251A	CE 33μ 25V
C129,229	0B01412A	CE 10μ 16V
	— Headphone Amp. —	
IC304	0B06370A	IC 4556D
Q108,208	0B06299A	TR 2SC2878
R165,265	0B09685A	RK 2.2K 1/6W J
R166,266	0B09697A	RK 6.8K 1/6W J
R167,168 267,268	0B09725A	RK 100K 1/6W J
R170,270	0B05579A	RK 22 1/4W J
R171,199 271,299	0B09677A	RK 1K 1/6W J
R342	0B09049A	RF 22 1/4W J
C130,230	0B09327A	CE 0.33μ 50V (LN)
C131,231	0B01398A	CE 220μ 16V
C170,270	0B09291A	CC 0.022μ 50V Z
C323	0B01400A	CE 100μ 16V
	— Meter Amp. —	
Q105,106 107,205 206,207	0B01872A	TR 2SC945L (P,Q)
ZD101,201	0B12101A	ZD 5V 5C-1
D101,201	0B06398A	SiD 1SS176
D102,202 305	0B06181A	SiD 1SS53
VR108,208	0B32011A	Semi-fixed VR 100K
R141,241	0B09713A	RK 33K 1/6W J
R142,242	0B01889A	RK 100K 1/4W J
R143,243	0B09743A	RK 560K 1/6W J
R144,244	0B09729A	RK 150K 1/6W J
R145,146 245,246	0B09725A	RK 100K 1/6W J
R147,148 247,248	0B09719A	RK 56K 1/6W J
R149,249	0B09709A	RK 22K 1/6W J
R320	0B09216A	RF 10 1/4W J
C124,224	0B09570A	CE 0.15μ 50V (LN)
C125,225	0B09148A	CE 10μ 25V (LN)
C308	0B01400A	CE 100μ 16V
	— Miscellaneous —	
	0B60007A	Main P.C.B.
	0B02348A	JP Connector 3P (1)
	0B02349A	JP Connector 4P (1)
	0B81011A	Dip Mate 4P (3)
	0B81012A	Dip Mate 5P (2)
	0B81013A	Dip Mate 6P (3)
	0B82082B	Ribbon Cable 4P (1)
	0B82083B	Ribbon Cable 6P (3)
	0B82084B	Ribbon Cable 5P (1)
	0B82085B	Ribbon Cable 4P (2)
	0J04743A	Push Switch Plate (1)

Schematic Ref. No.	Part No.	Description
	BA05009A	Logic P.C.B. Ass'y
	— DC Supply —	
IC401	0B11030A	IC NJM79M12
IC402	0B06380A	IC NJM7812
Q401,404	0B06322A	TR 2SC2002 (K,L)
Q402,403 406	0B01872A	TR 2SC945L (P,Q)
Q405	0B06372A	TR 2SA953 (K,L)
ZD401	0B06167A	ZD 6.2V RD6.2EB3
ZD402	0B12003A	ZD 5.6V RD5.6JB2T
D401	0B06282A	Diode Bridge DBA10
D402	0B12100A	Double Diode MC921
D403,404 405,406	0B06398A	SiD 1SS176
R401	0B08715A	Thermal Fuse 129
R402	0B24008A	RF 7.5 2W J
R403	0B24006A	RF 560 1W J
R404	0B01857A	RK 1K 1/4W J
R405	0B05575A	RK 560 1/4W J
R406	0B24007A	RF 22 2W J
R407	0B09725A	RK 100K 1/6W J
R408	0B09707A	RK 18K 1/6W J
R409	0B09695A	RK 5.6K 1/6W J
R410	0B09729A	RK 150K 1/6W J
R411	0B09693A	RK 4.7K 1/6W J
R412	0B09701A	RK 10K 1/6W J
R413	0B05509A	RK 33K 1/4W J
R414	0B09719A	RK 56K 1/6W J
R415	0B09677A	RK 1K 1/6W J
R416	0B01679A	RK 100 1/4W J
R417	0B01683A	RK 15K 1/4W J
C401	0B40152A	CE 1000μ 16V
C402	0B40151A	CE 1000μ 25V
C403	0B01392A	CE 470μ 16V
C404	0B01403A	CE 47μ 16V
C405,406	0B09292A	CC 0.1μ 50V Z
C407	0B09799A	CE 4700μ 25V
C408	0B40150A	CE 15000μ 16V
C409	0B40011A	CE 33μ 16V
C410	0B09222A	CE 0.47μ 50V (LN)
C411	0B01405A	CE 1μ 50V
C412	0B01398A	CE 220μ 16V
CN8	0B08656A	2P-T Post
	0B08676B	Heat Sink A304 (1)
	0B08680B	Heat Sink A (1)
	0E00507A	Nut Hex. M3 (Chromate) (2)
	0E00612A	M3x6 ⊕Pan (2A) (2)
	0E00857A	BT 3x6 ⊕Binding (Chromate) (2)
	— Logic —	
IC601	0B06178A	IC μPD4011BC
IC602	0B06214A	IC μPD4071BC
IC603	0B11020A	IC TMP4315BP-1814
Q601	0B06332A	TR 2SB564M
Q602,604 606,621 623,625	0B01872A	TR 2SC945L (P,Q)
Q603,605 616-619	0B06013A	TR 2SA733 (P,Q) (6)
Q607,624	0B10021A	TR 2SD1164 (L,K)
Q608,609 610,611	0B06372A	TR 2SA953 (K,L)
Q612,613 614,615	0B06322A	TR 2SC2002 (K,L)
Q620	0B06066A	TR 2SD471 (L,M)
Q622	0B10023A	TR 2SC2002 (K)
D601,603 604,605 606,607 608,612 613,615 617,618 619,620	0B06398A	SiD 1SS176
D602	0B12100A	Double Diode MC921
D609,610 611,614	0B06181A	SiD 1SS53
L601	0B06689A	L-C Block
VR601	0B32007A	Semi-fixed VR 470
R601	0B09749A	RK 1M 1/6W J
R602,604 613,616 617,618 619,651	0B09725A	RK 100K 1/6W J

Schematic Ref. No.	Part No.	Description
R603,606 660,652	0B09701A	RK 10K 1/6W J
R605	0B09617A	RK 3.3 1/6W J
R607,608 615	0B05509A	RK 33K 1/4W J
R609,610 647	0B09729A	RK 150K 1/6W J
R611	0B01888A	RK 10K 1/4W J
R612	0B09217A	RF 5.6 1/4W J
R614,644	0B09737A	RK 330K 1/6W J
R620	0B09711A	RK 27K 1/6W J
R621	0B09695A	RK 5.6K 1/6W J
R622	0B09663A	RK 270 1/6W J
R623	0B09672A	RK 620 1/6W J
R624	0B01854A	RK 39K 1/4W J
R625	0B09699A	RK 8.2K 1/6W J
R626	0B06706A	RW 3.5
R627,628	0B01679A	RK 100 1/4W J
R629,630	0B01933A	RK 220 1/4W J
R631	0B24007A	RF 22 2W J
R632	0B09707A	RK 18K 1/6W J
R633,636 637,640	0B09741A	RK 470K 1/6W J
R634,635 638,639 658	0B09677A	RK 1K 1/6W J
R641,650	0B01889A	RK 100K 1/4W J
R642,661	0B09717A	RK 47K 1/6W J
R643	0B01681A	RK 3.3K 1/4W J
R645,646	0B09733A	RK 220K 1/6W J
R648,649	0B05629A	RK 2.7K 1/4W J
R653	0B09689A	RK 3.3K 1/6W J
R654,655	0B09713A	RK 33K 1/6W J
R656	0B09803A	R-Network 47Kx5
R657	0B09824A	R-Network 100Kx3
R659	0B09681A	RK 1.5K 1/6W J
R662	0B24023A	R Fuse 1.0
C601	0B40079A	CE 220μ 16V
C602,604 610	0B01405A	CE 1μ 50V
C603,606	0B09327A	CE 0.33μ 50V (LN)
C605,607	0B01802A	CM 2200P 50V J
C608	0B09091A	CC 0.01μ 25V M
C609	0B09222A	CE 0.47μ 50V (LN)
C611	0B09817A	CE 33μ 10V (LN)
CN3	0B02245A	9P-T Post
CN4	0B02243A	5P-T Post
CN5	0B08656A	2P-T Post
	— Cat Control —	
IC501	0B11023A	IC LM6402G-279
IC502	0B06143A	IC μPD4001BC
IC503	0B06124B	IC NJM4558D
Q501,504 508,512	0B06013A	TR 2SA733 (P,Q)
Q502,503 506,507 509	0B06100A	TR 2SC945A (K,P,Q)
Q505	0B06129A	FET 2SK117Y
Q510	0B06069A	TR 2SB564 (L,M)
Q511	0B06066A	TR 2SD471 (L,M)
D501	0B06181A	SiD 1SS53
D502-508 511	0B06398A	SiD 1SS176 (8)
X501	0B02307A	Xtal 800KHz
VR501	0B07269A	Semi-fixed VR 50K
VR502	0B07256A	Semi-fixed VR 10K
VR503	0B07329A	Semi-fixed VR 2K
R501,509 510,513 514,515 519,529 531,532 535,538 540	0B09725A	RK 100K 1/6W J
R502	0B01889A	RK 100K 1/4W J
R503	0B05743A	RK 27K 1/4W J
R504,516 528	0B09749A	RK 1M 1/6W J
R505	0B01888A	RK 10K 1/4W J
R506,507	0B09315A	RM 332K 1/4W F
R508	0B09729A	RK 150K 1/6W J
R511	0B22491A	RM 210K 1/4W F
R512	0B09701A	RK 10K 1/6W J
R517,534	0B09719A	RK 56K 1/6W J
R518	0B22532A	RM 464K 1/4W F
R520,530	0B09727A	RK 120K 1/6W J
R521	0B09699A	RK 8.2K 1/6W J

Schematic Ref. No.	Part No.	Description
R522,523 541	0B09709A	RK 22K 1/6W J
R524,525 536	0B09685A	RK 2.2K 1/6W J
R526	0B09741A	RK 470K 1/6W J
R527	0B09743A	RK 560K 1/6W J
R533	0B09713A	RK 33K 1/6W J
R537	0B09695A	RK 5.6K 1/6W J
R539	0B05671A	RK 2.2M 1/4W J
R542	0B09715A	RK 39K 1/6W J
C502,503	0B09282A	CC 100P 50V K
C504	0B01405A	CE 1μ 50V
C505,506	0B01412A	CE 10μ 16V
CN6	0B02280A	2P-T Post BLUE
CN7	0B81023A	2P-T Post RED
CN9	0B08653A	3P-T Post
	— Miscellaneous —	
	0B60012B	Logic P.C.B.
FC1	0B81015A	Dip Mate 10P
FC3,11	0B81011A	Dip Mate 4P
FC4,9	0B81010A	Dip Mate 3P
FC10,12	0B02351A	JP Connector 6P
FC13	0B02348A	JP Connector 3P
	0B82088B	Ribbon Cable 4P (1)
	0B82092B	Ribbon Cable 4P (1)
	0B82093B	Ribbon Cable 3P (1)

6.11. Logic P.C.B. Ass'y

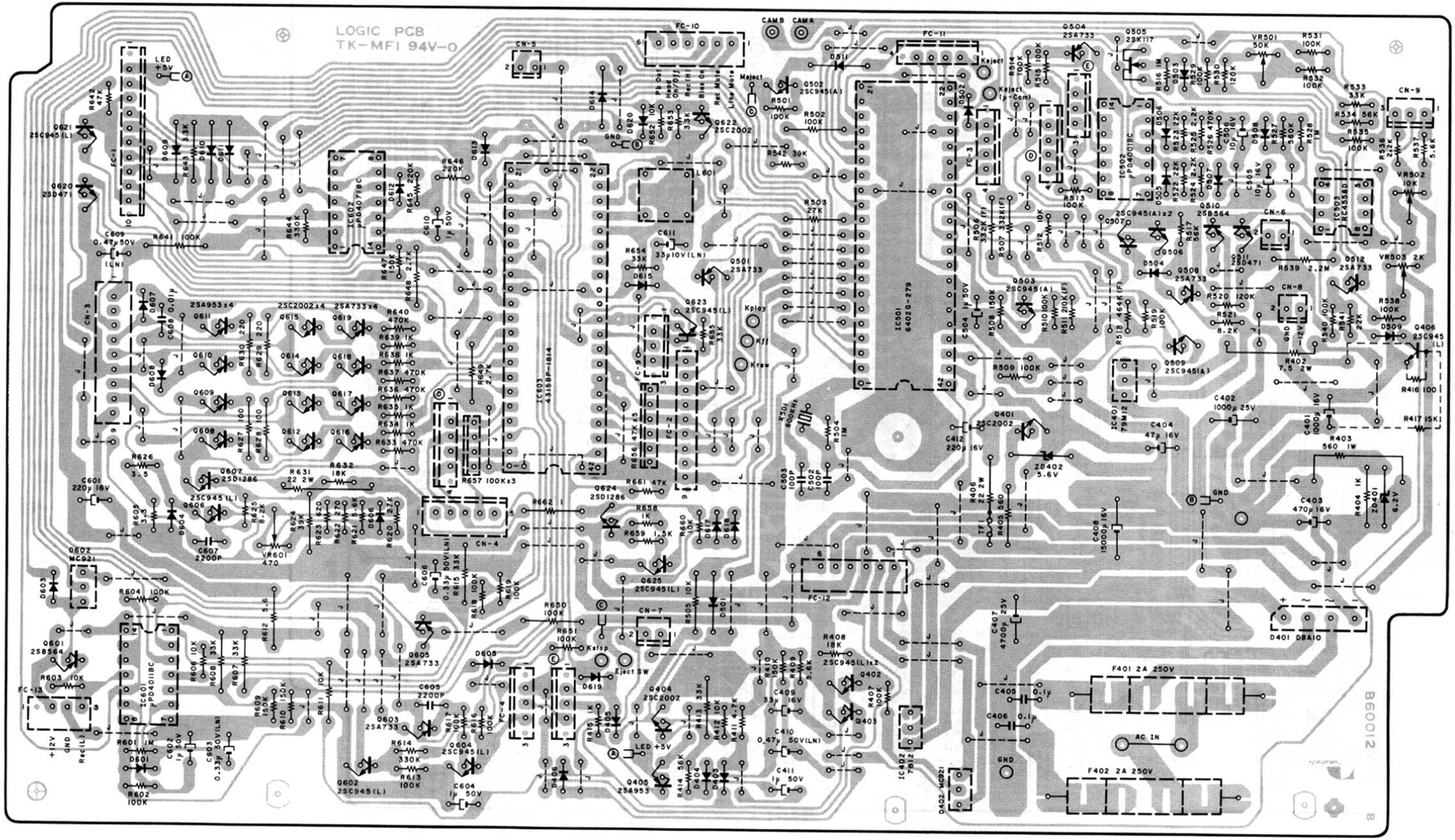

Fig. 6.11.1 Serial No.: A80205051 —

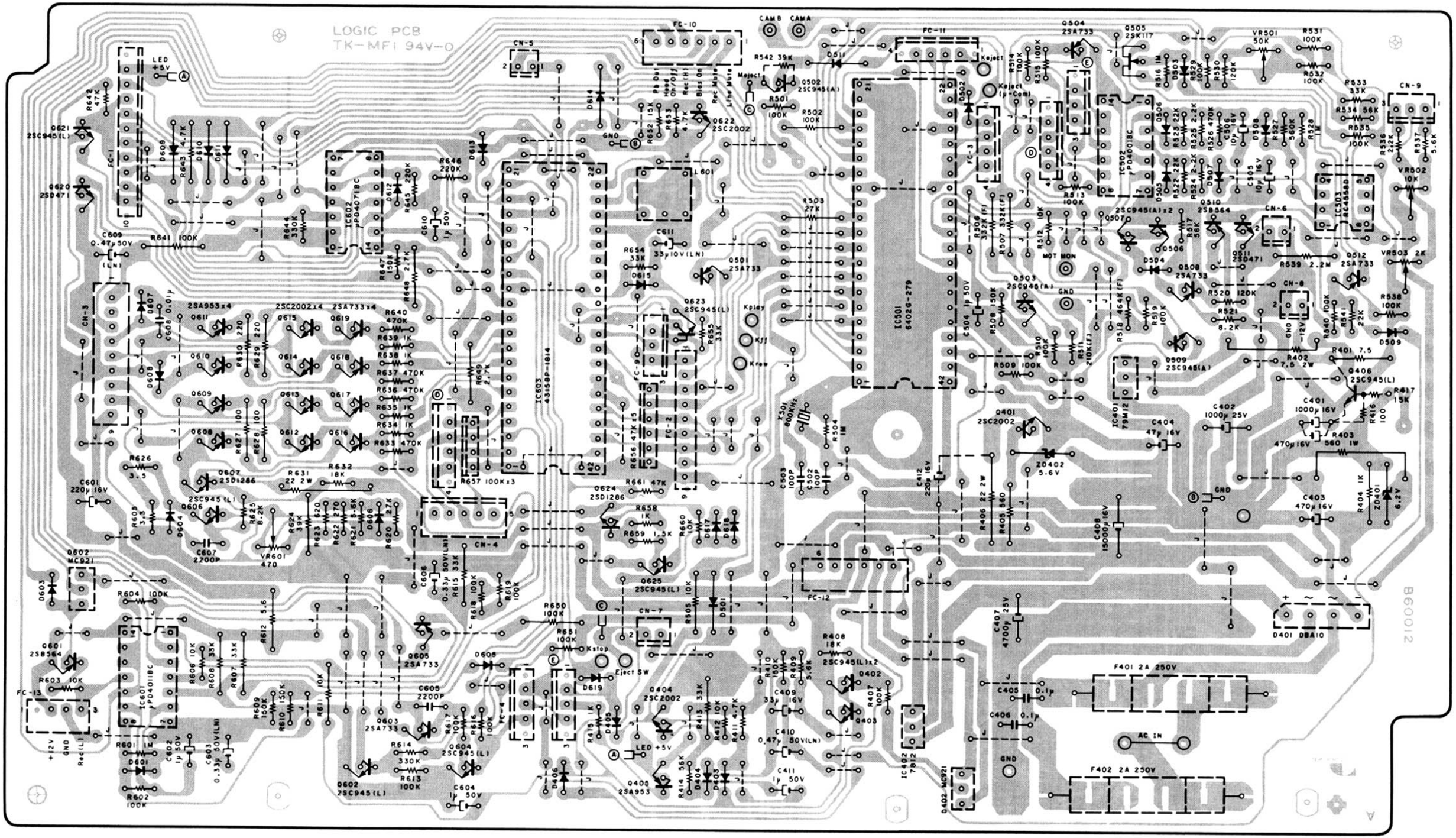

Fig. 6.11.2 Serial Nos.: A80201001 — A80205050

7. SCHEMATIC DIAGRAMS

7.1. Attention to Servicemen

(1) Caution

(a) If a part is in need of removing (or replacing) for service, it should be remounted (or replaced with specified parts) by the same methods as before after servicing.

(b) The appliance should be used only specified parts for preventing a risk of fire and electric shock and maintaining the characteristics.

(c) Before returning the repaired appliance to a customer, check to insure that the exposed part is accurately insulated from the Power Supply by measuring the leakage current or the insulation resistance between them.

(2) Parts Replacement

Following parts shall be replaced with the specified ones. Refer to the Parts List.

(a) Power Supply Circuit
- Power Cord
- Power Transformer: T1
- Fuses: F401, 402

(b) Power Switch P.C.B. Ass'y
- Power Switch: SW1
- Spark Killer: M2

(c) Logic P.C.B. Ass'y
- Regulator ICs: IC401, 402
- Power Transistors: Q510, 511, 601, 607, 620, 624
- Diode Bridge: D401
- Double Diode: D402
- Thermal Fuse: TF1
- Fuse Resistor
- Fail Safe Type Resistors: R401, 402, 403, 406, 612, 631

(d) Main P.C.B. Ass'y
- Fail Safe Type Resistors: R320, 342

(e) Tape Switch P.C.B. Ass'y
- Power Transistor: Q301
- Fail Safe Type Resistors: R318, 350

(f) Lid Lamp P.C.B. Ass'y
- Lid Lamp

7.2. IC Block Diagrams

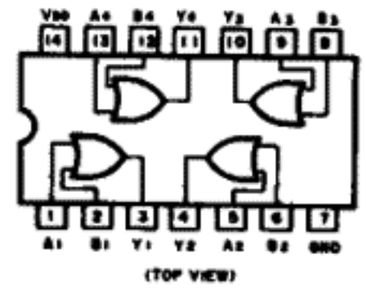

Fig. 7.2.1. OR Gate C-MOS IC μPD4071BC

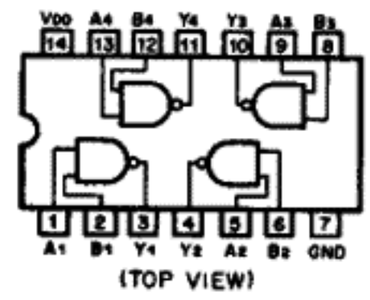

Fig. 7.2.2. NAND Gate C-MOS IC μPD4011BC

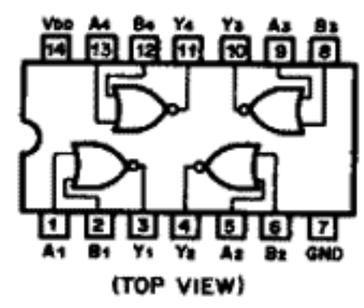

Fig. 7.2.3. NOR Gate C-MOS IC μPD4001BC

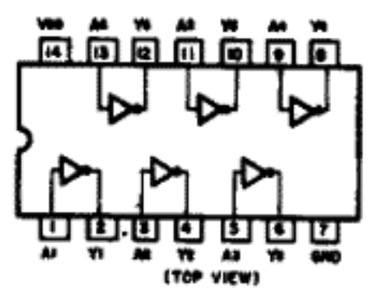

Fig. 7.2.4. Inverter C-MOS IC TC4069UBP

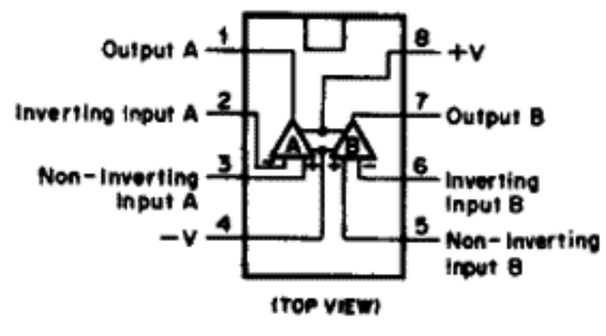

Fig. 7.2.5. Operational Amp. IC4558D, 4556D, TL092

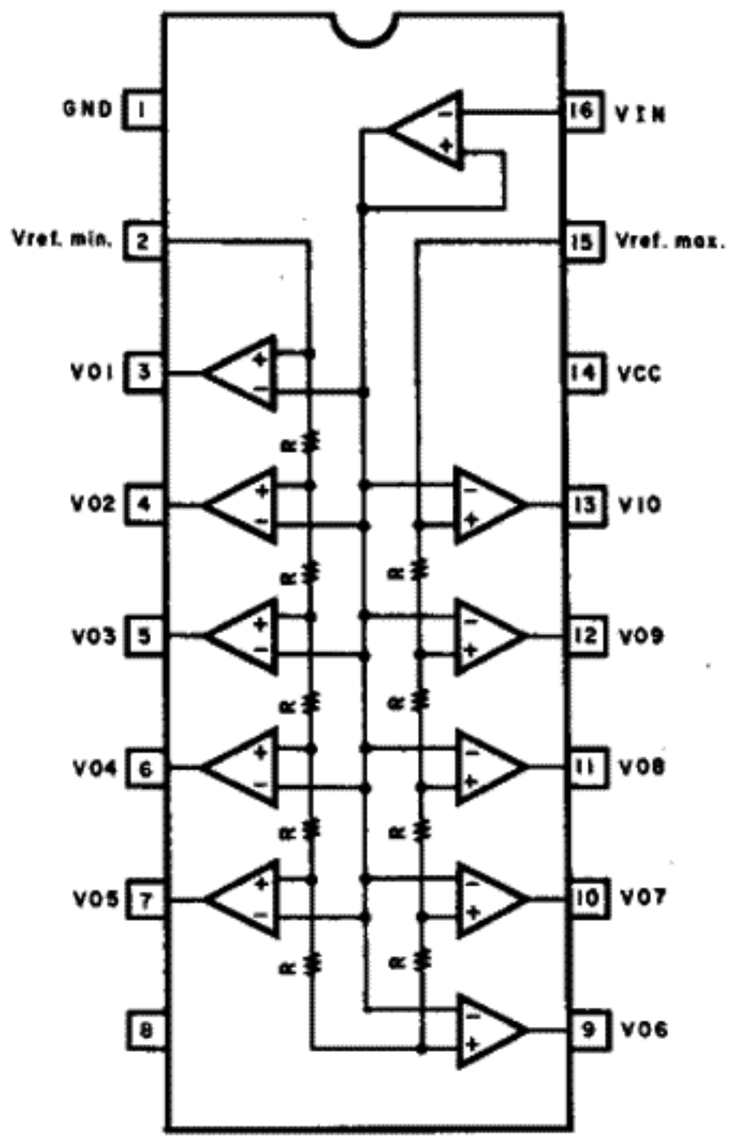

Fig. 7.2.6. Level Meter Driver TA7612AP

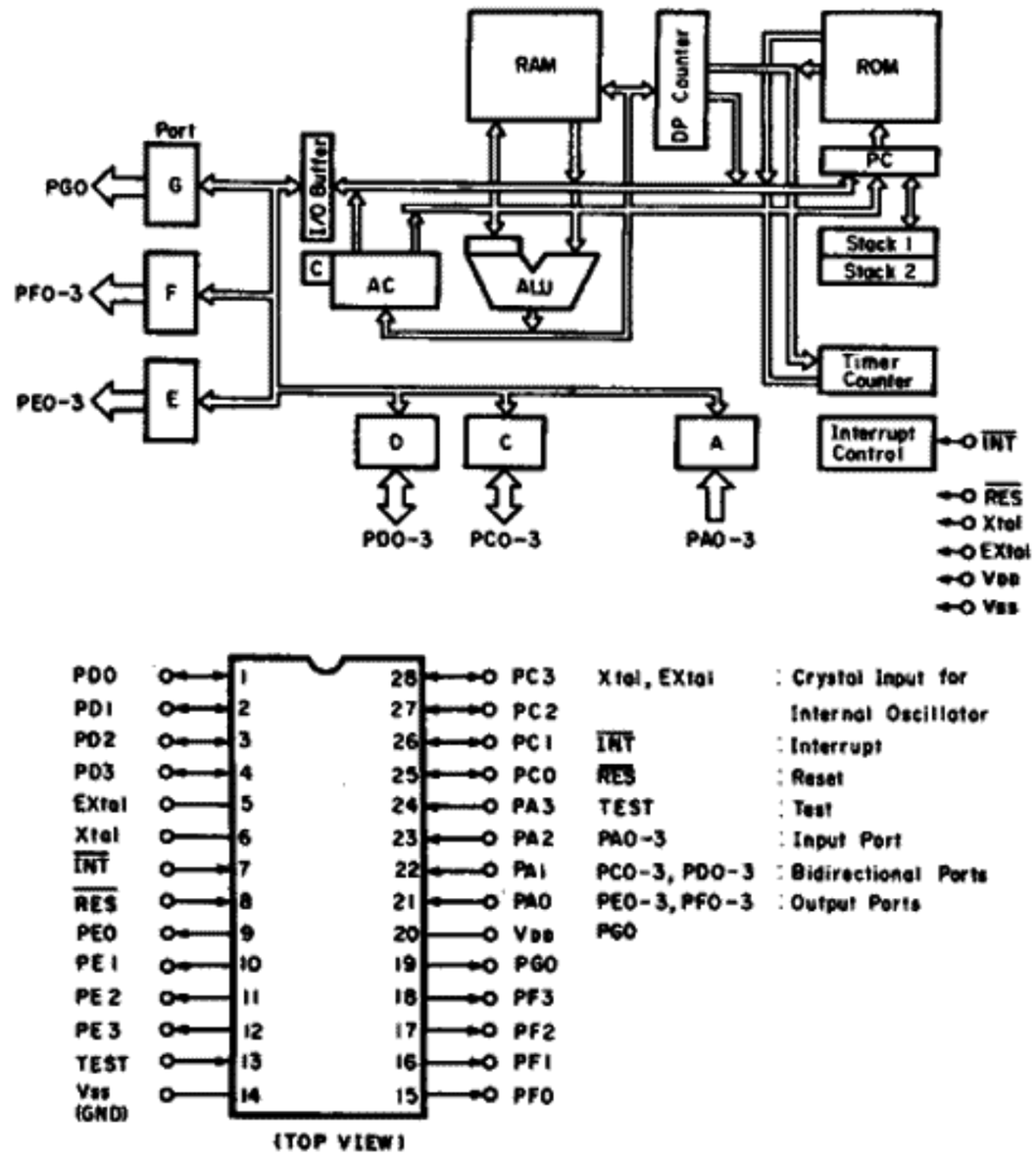

Fig. 7.2.8. 4-Bit Micro-processor LM6416E-106

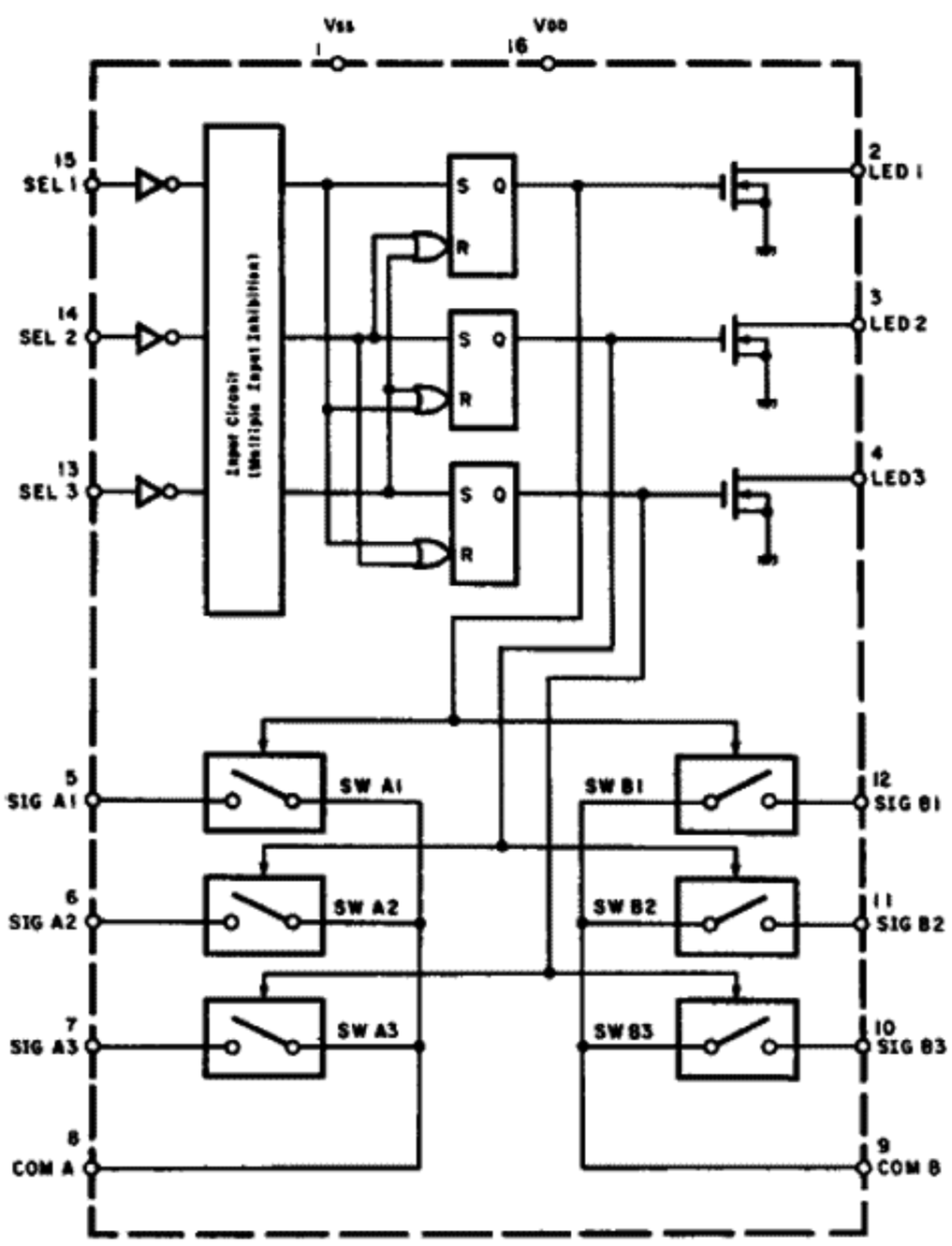

Fig. 7.2.7. Analog Switch Selector TC9145P

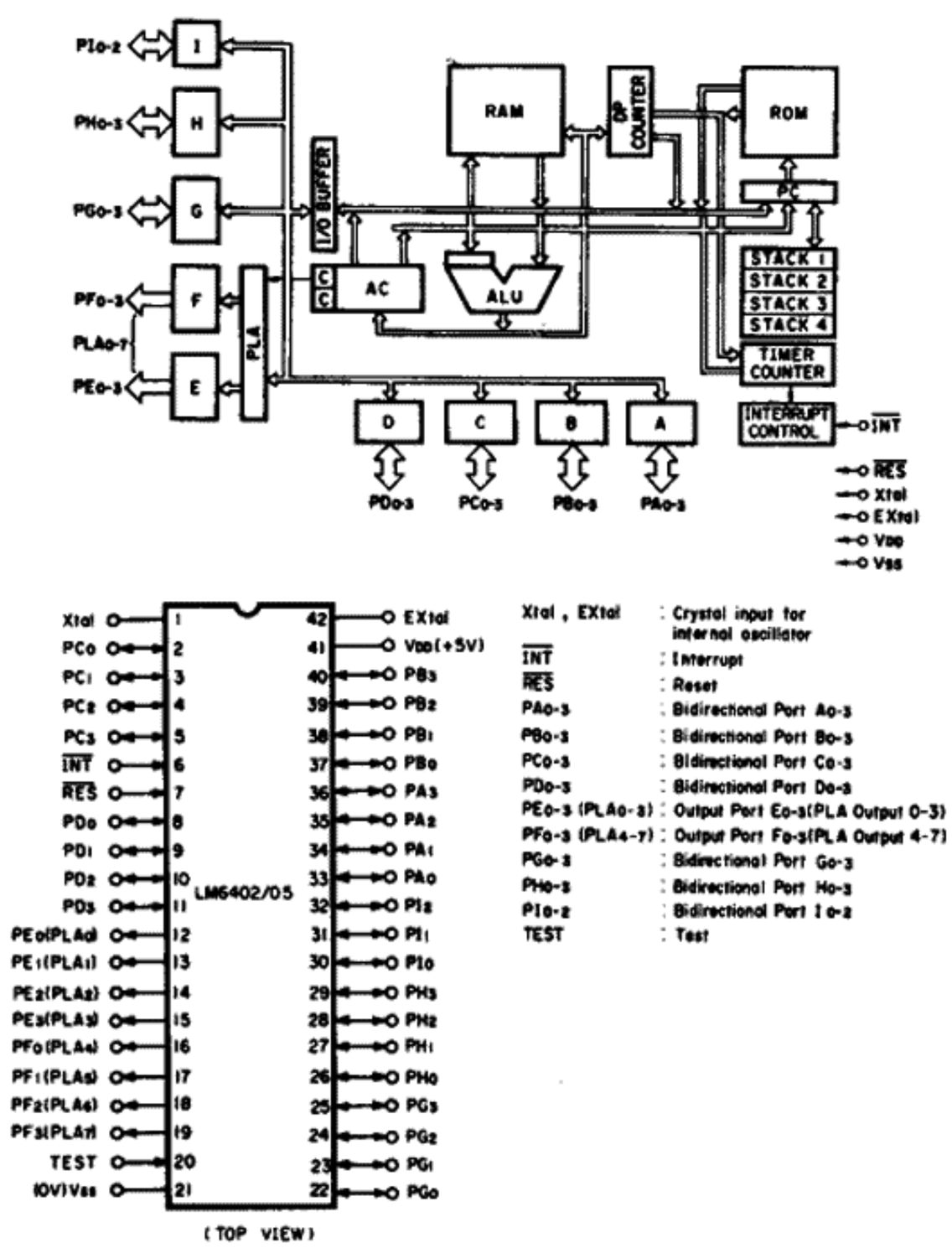

Fig. 7.2.9. 4-Bit Micro-processor LM6402G-279

7.3. Schematic Diagrams
7.3.1. Amplifier Section
(1) Serial No.: A80205051 —

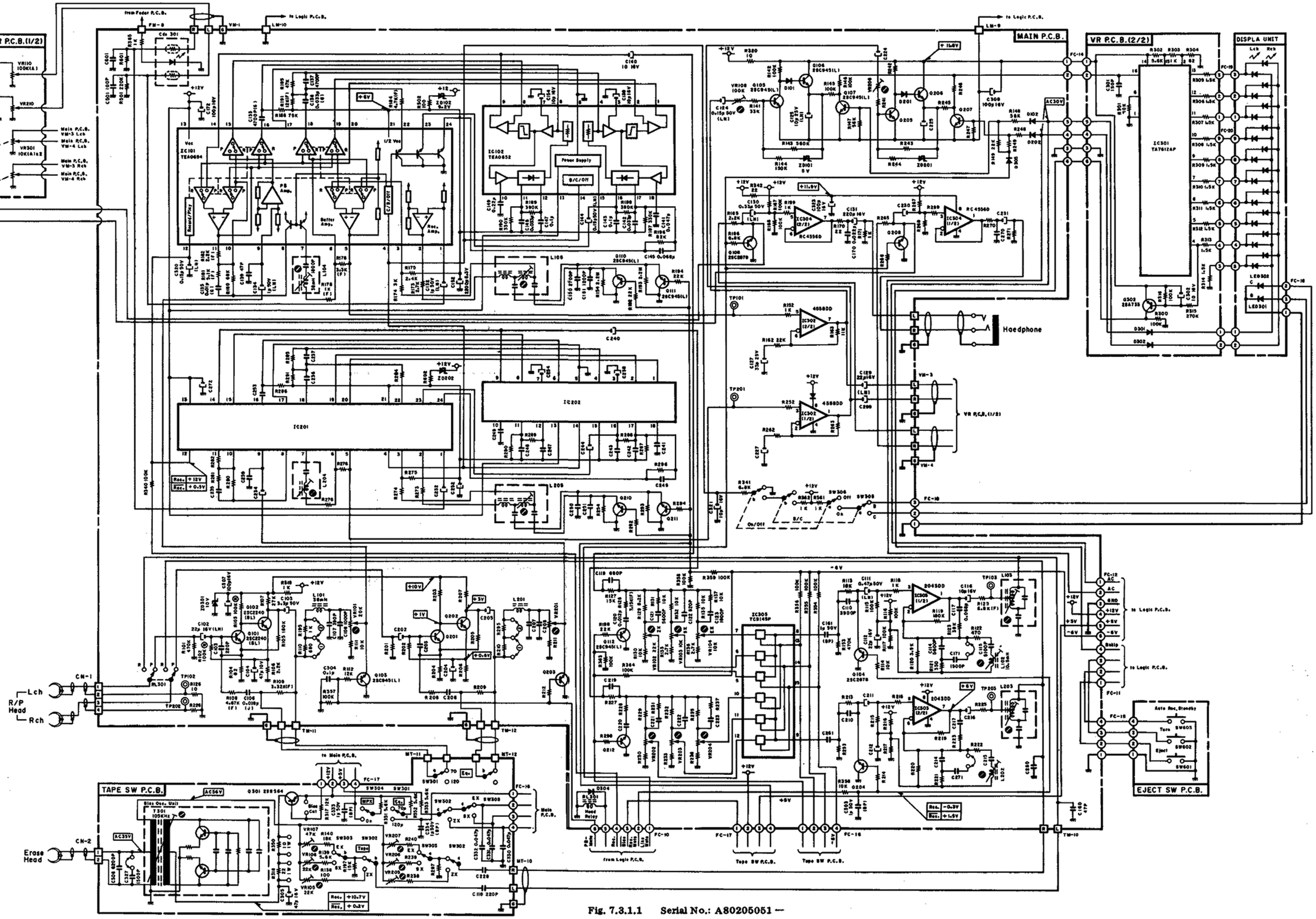

Fig. 7.3.1.1 Serial No.: A80205051 —

(2) Serial Nos.: A80201001 — A80205050

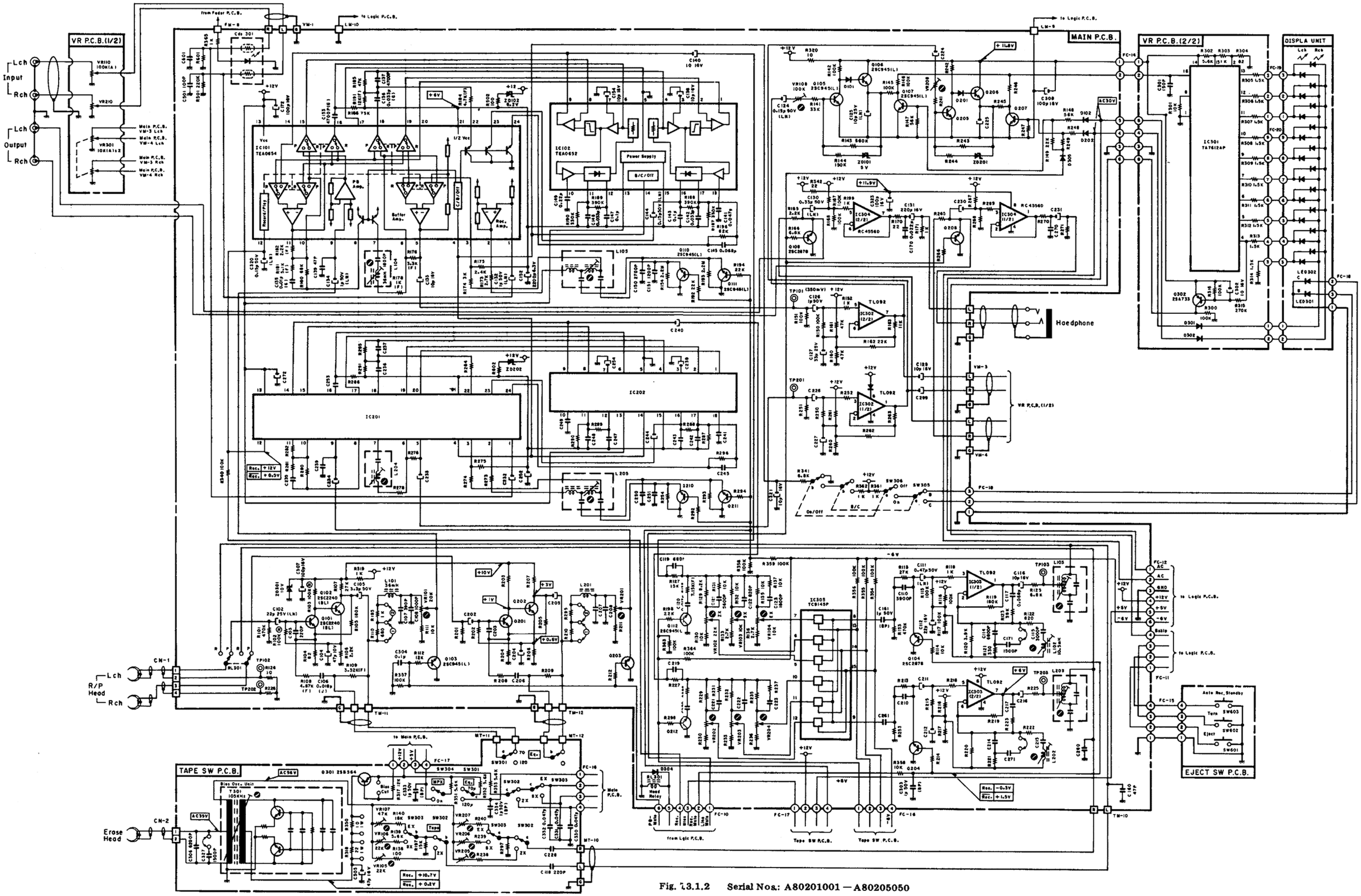

Fig. 13.1.2 Serial Nos.: A80201001 — A80205050

Notes: 1. Diode is 1SS53, 1S1555, or 1SS176 unless otherwise specified.
2. Resistor and capacitor marked with * show typical value.
3. 2SA733, 2SA608SP, 2SA1048 and 2SA1175 are interchangeable with each other.
4. 2SC945, 2SC536SP, 2SC2458 and 2SC2785 are interchangeable with each other.

7.3.2. Mechanism Control Section

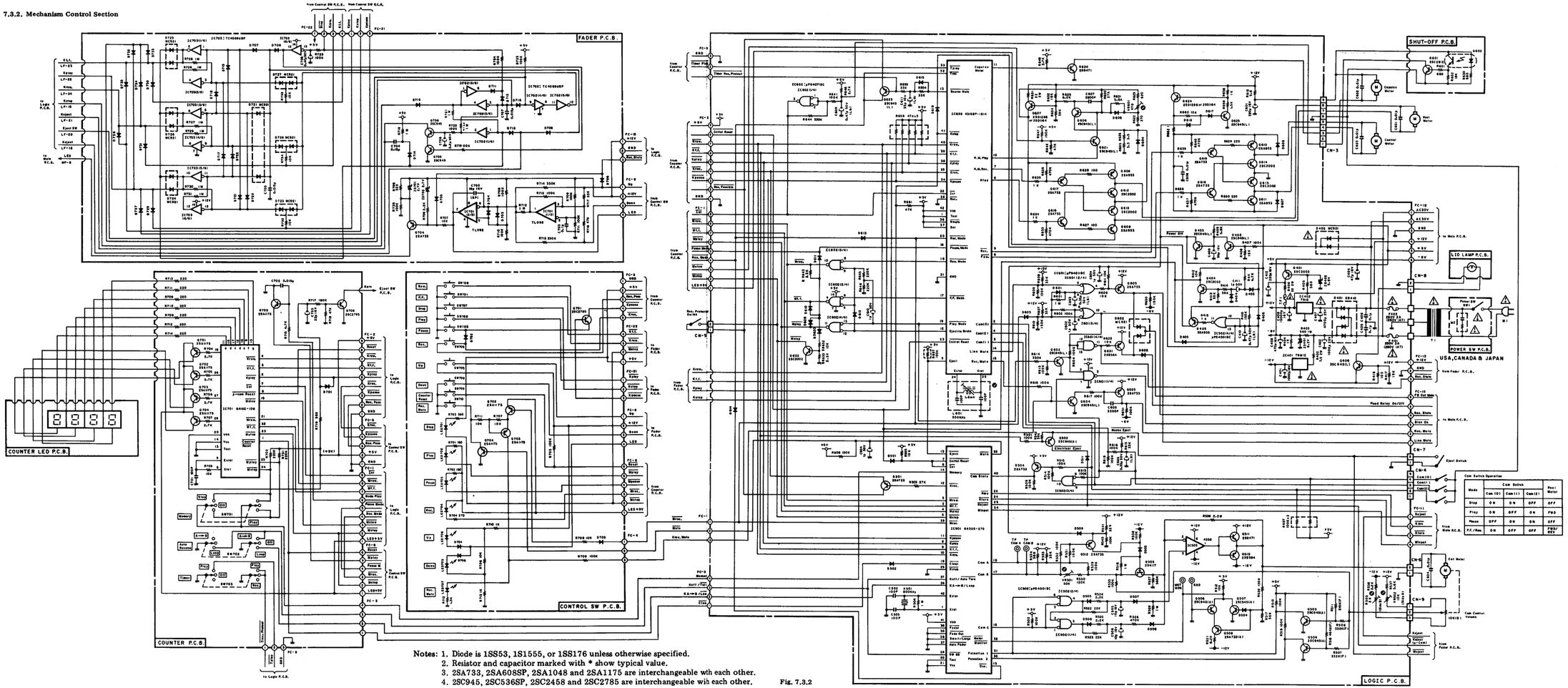

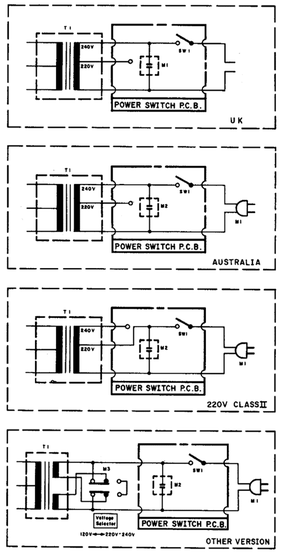

Notes: 1. Diode is 1SS53, 1S1555, or 1SS176 unless otherwise specified.
2. Resistor and capacitor marked with * show typical value.
3. 2SA733, 2SA608SP, 2SA1048 and 2SA1175 are interchangeable with each other.
4. 2SC945, 2SC536SP, 2SC2458 and 2SC2785 are interchangeable with each other.

Fig. 7.3.2

Mode	Cam Switch Operation			
	Cam (0)	Cam (1)	Cam (2)	Rev. Motor
Stop	ON	ON	OFF	OFF
Play	ON	OFF	ON	FWD
Pause	OFF	ON	ON	OFF
F.F./Rew.	ON	OFF	OFF	FWD/REV

WARNING:
Parts marked with the symbol ⚠ have critical characteristics.
Use ONLY replacement parts recommended by the manufacturer.
It is recommended that the unit be operated from a suitable DC supply or batteries during initial check-out procedures.

CAUTION:
Before returning the unit to the customer, make sure you make either (1) a leakage current check or (2) a line to chassis resistance check. If the leakage current exceeds 0.5 milliamp, or if the resistance from chassis to either side of the power cord is less than 240 k ohms, the unit is defective.
WARNING — DO NOT return the unit to the customer until the problem is located and corrected.

8. WIRING DIAGRAM

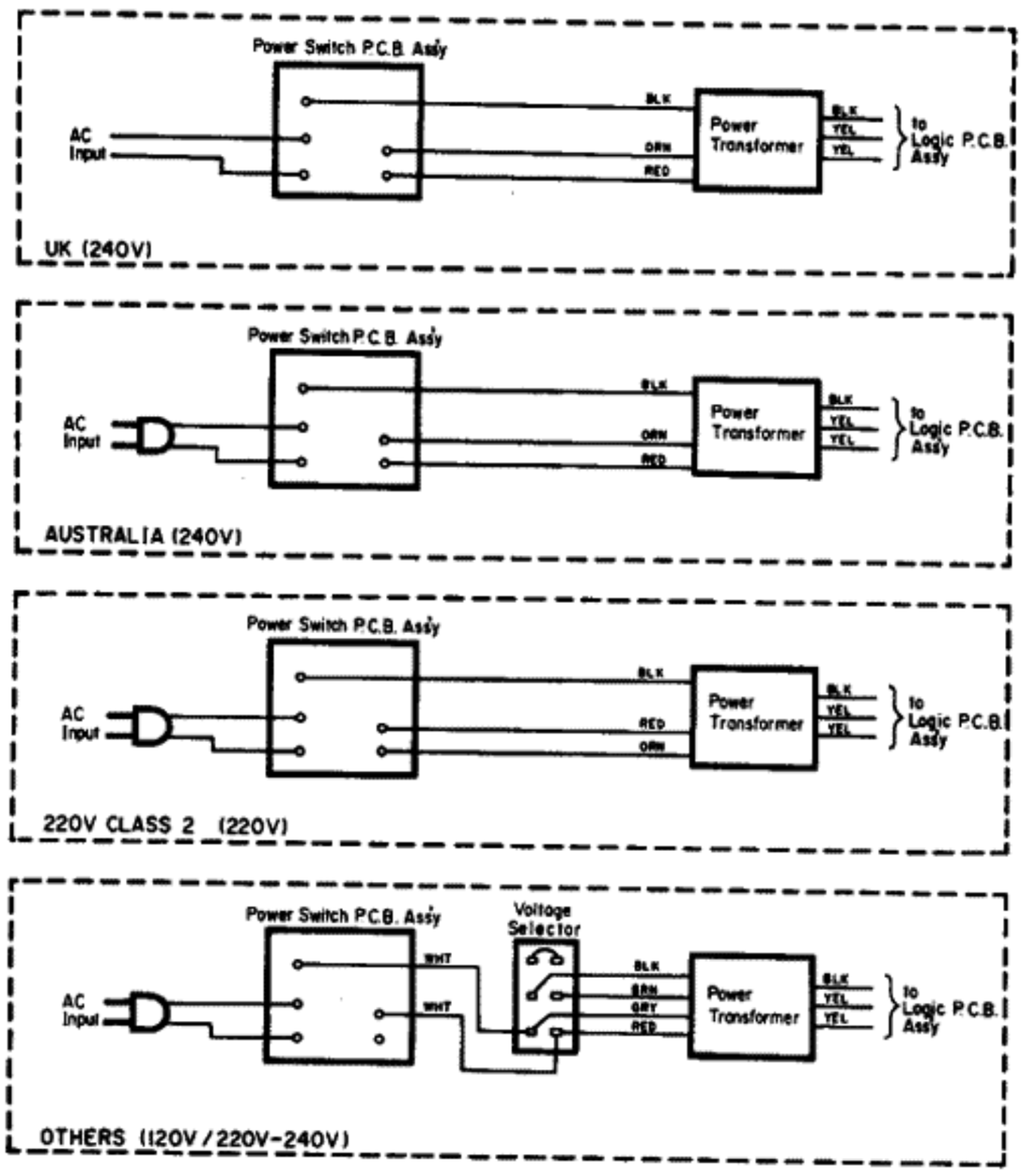

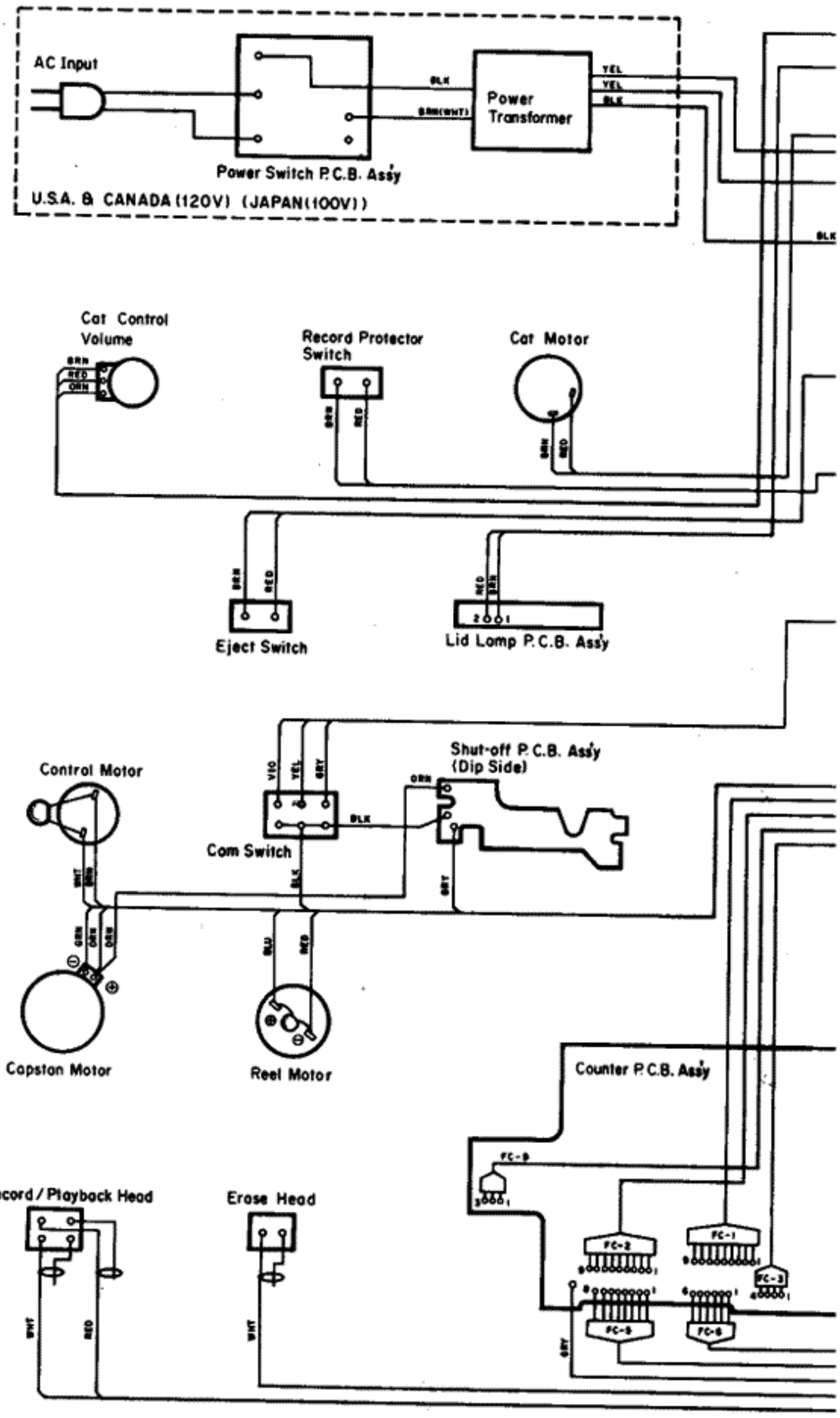

Notes: 1. Table of wire colors

BRN — Brown	BLU — Blue
RED — Red	VIO — Violet
ORN — Orange	GRY — Gray
YEL — Yellow	WHT — White
GRN — Green	BLK — Black

2. Component side view of the P.C.B. is illustrated unless otherwise specified.

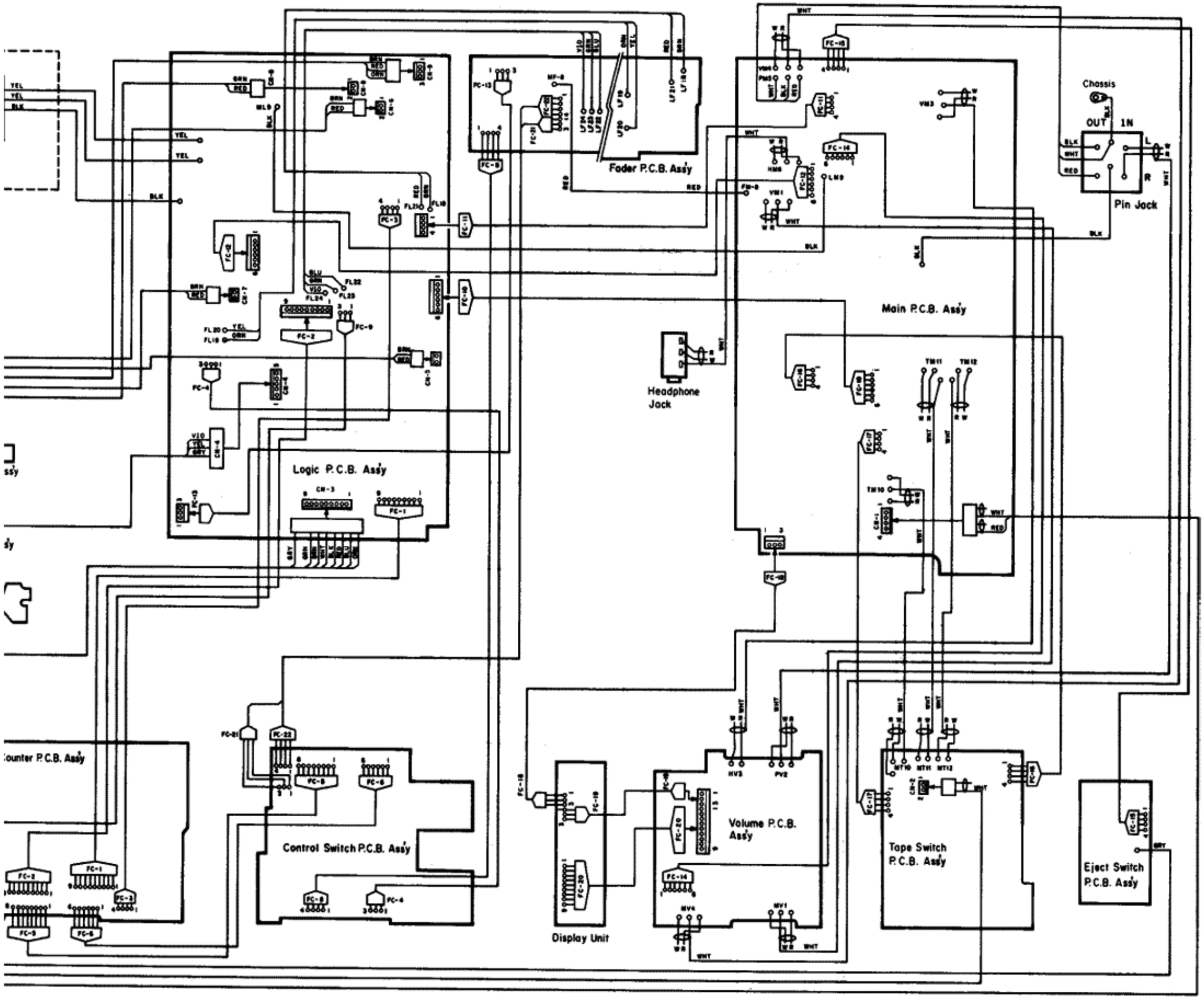
Fader P.C.B. Assy
Chassis
OUT
IN
Pin Jack
Main P.C.B. Assy
Headphone Jack
Logic P.C.B. Assy
Counter P.C.B. Assy
Control Switch P.C.B. Assy
Display Unit
Volume P.C.B. Assy
Tape Switch P.C.B. Assy
Eject Switch P.C.B. Assy

Fig. 8

9. BLOCK DIAGRAMS

9.1. Amplifier Section

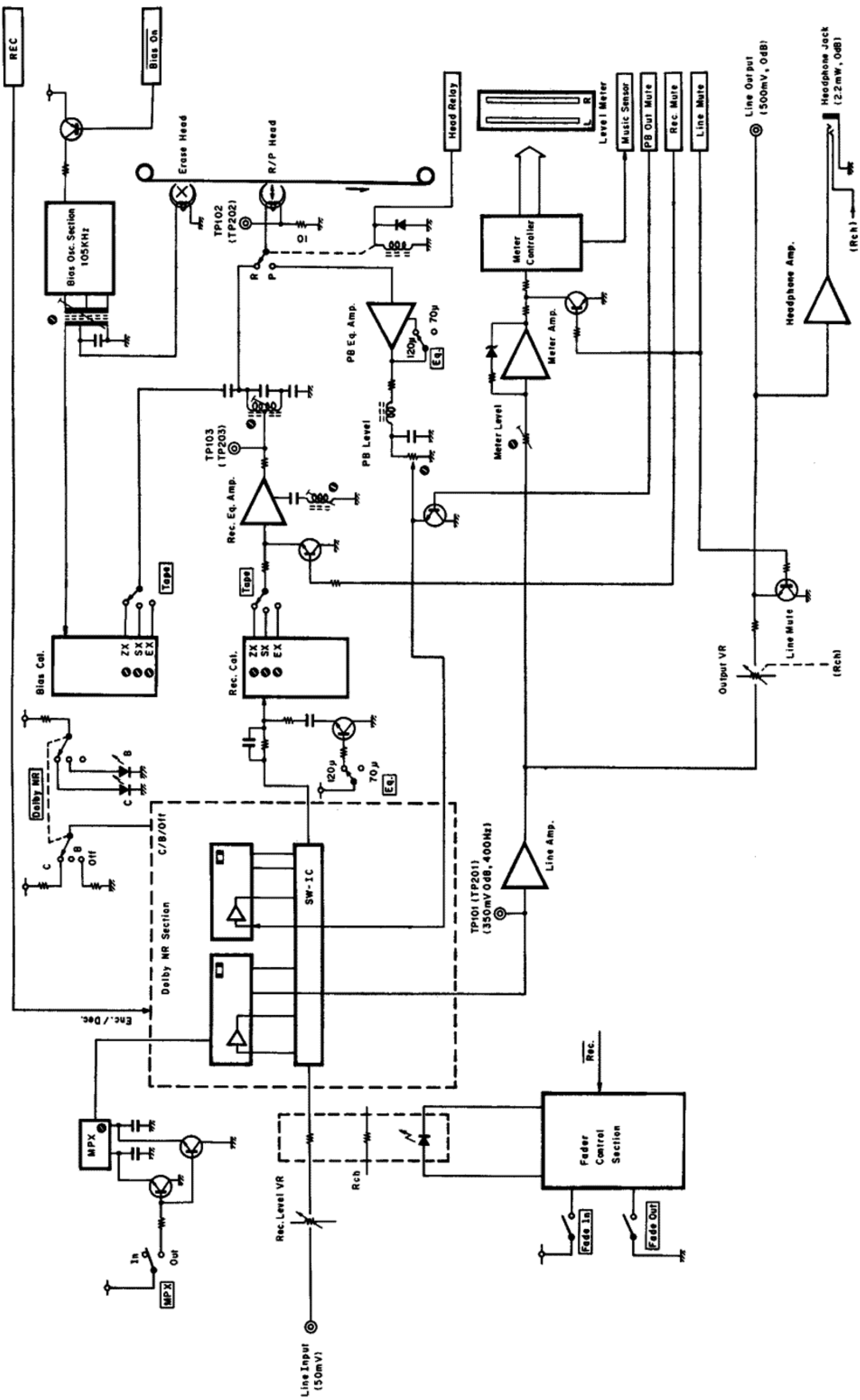

Fig. 9.1

9.2. Mechanism Control Section

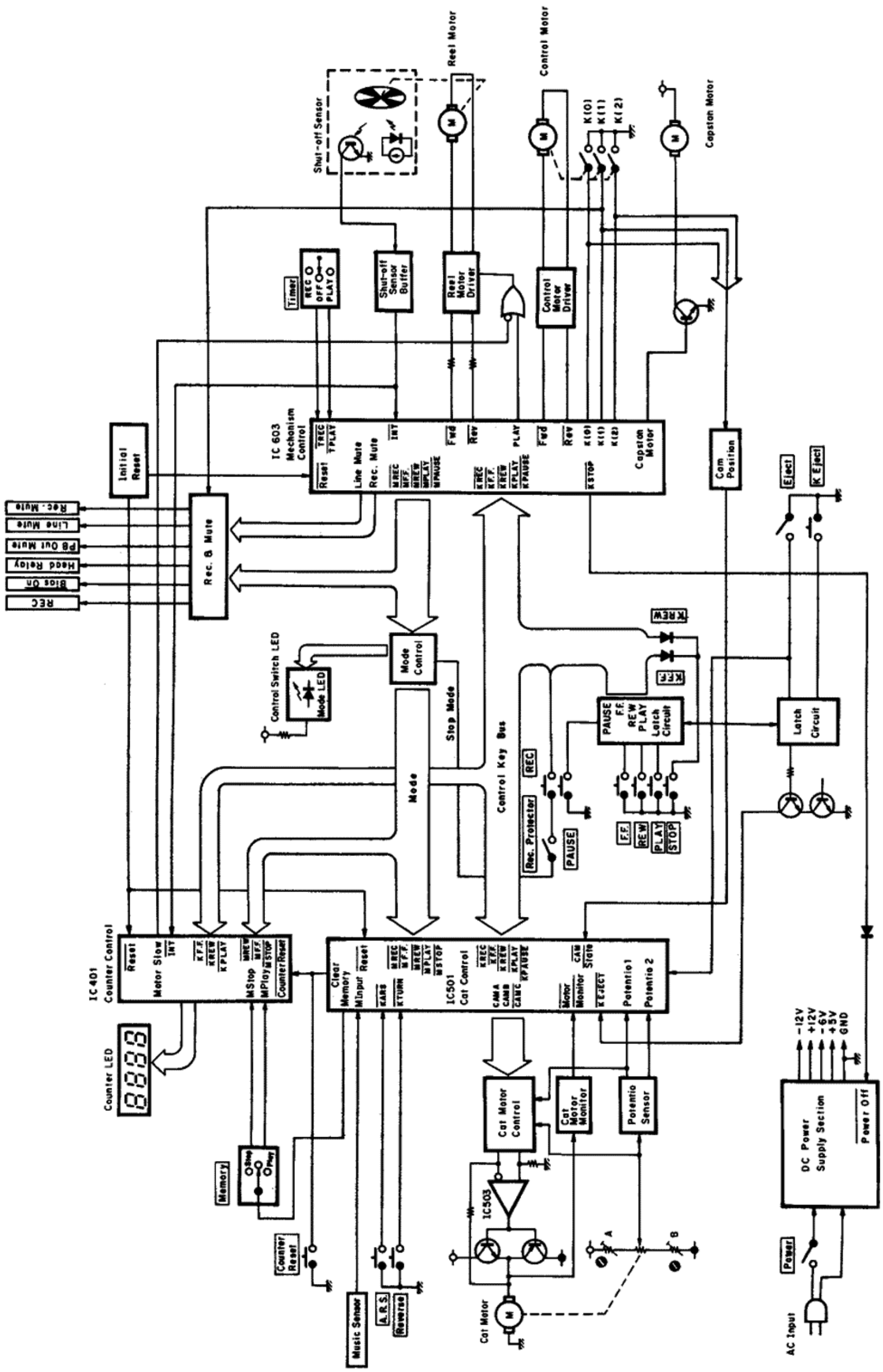

Fig. 9.2

10. TIMING CHART AND EQ. AMP. FREQUENCY RESPONSE

10.1. Timing Chart

(1) Overall Timing Chart

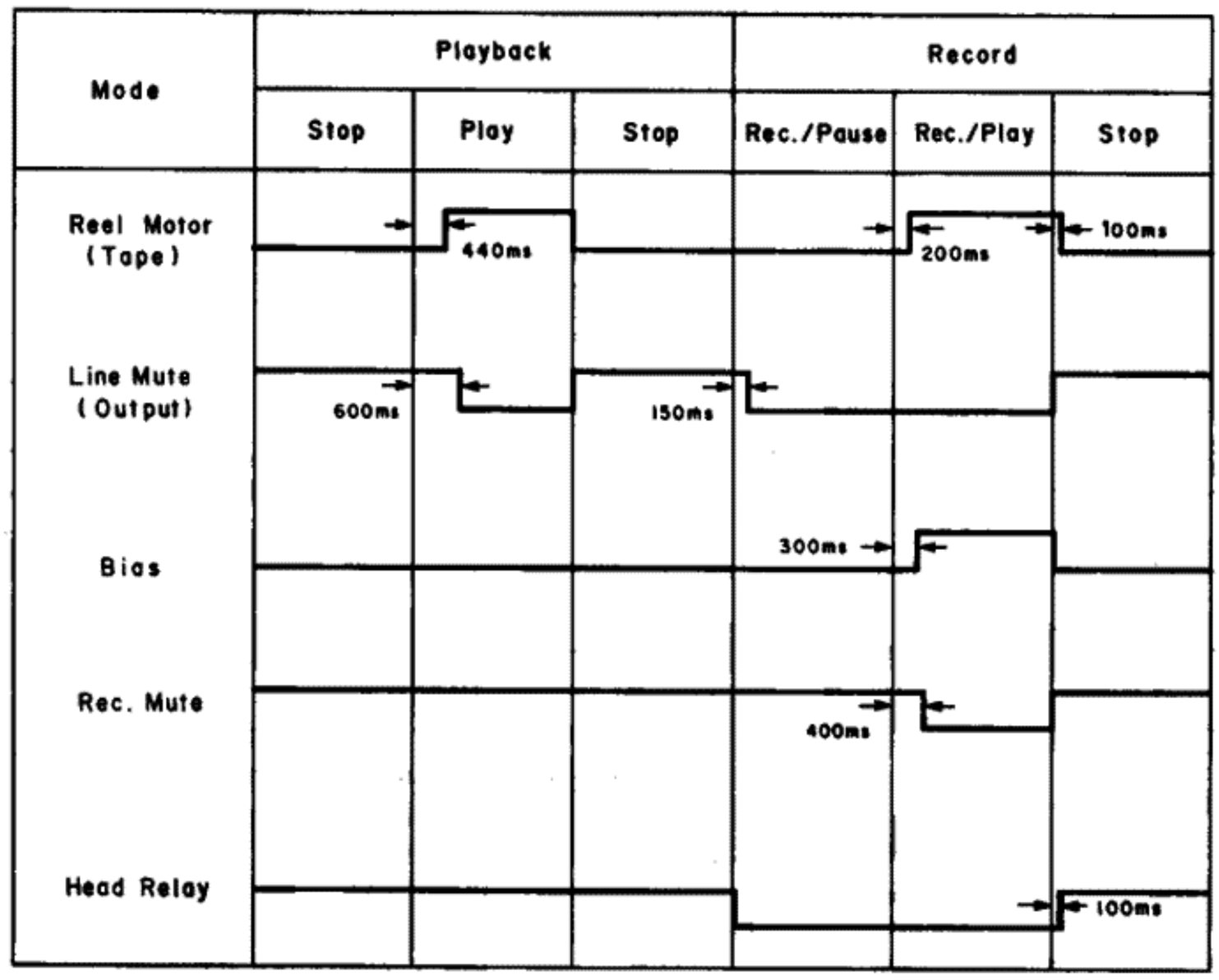

Fig. 10.1.1

(2) Mechanism Control Timing Chart

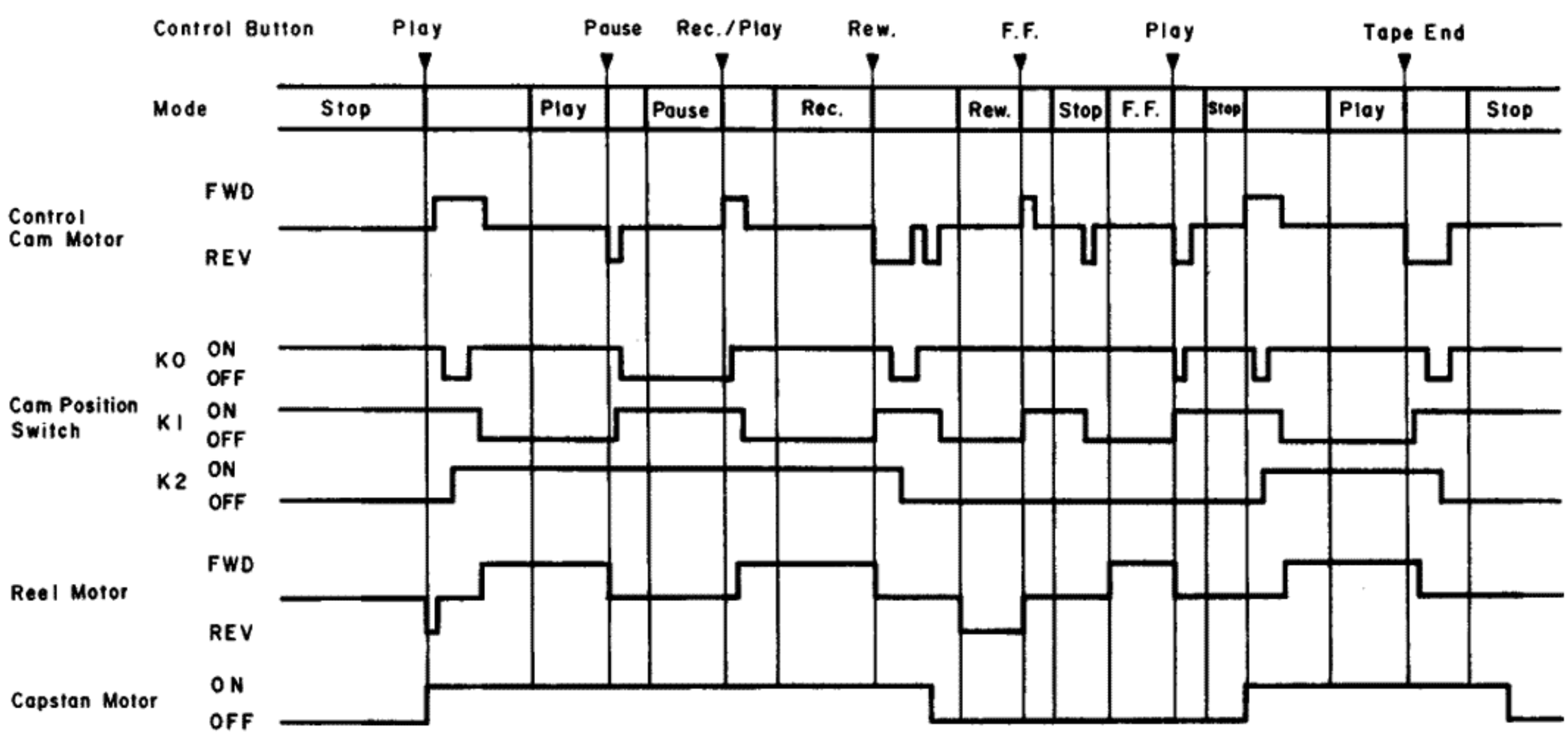

Fig. 10.1.2

10.2. Eq. Amp. Frequency Response
(1) Playback Frequency Response

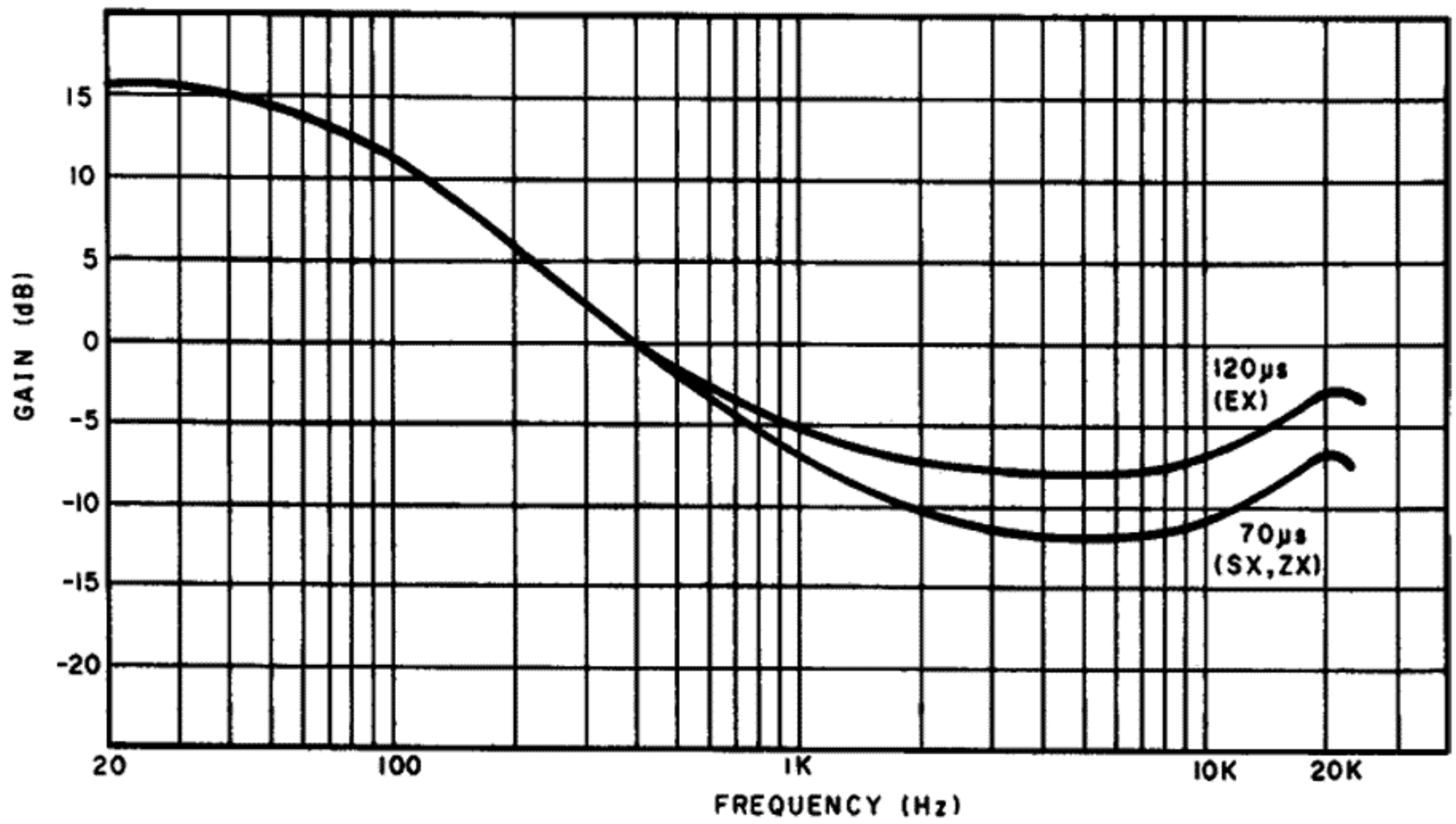

Fig. 10.2.1

(2) Record Current Frequency Response

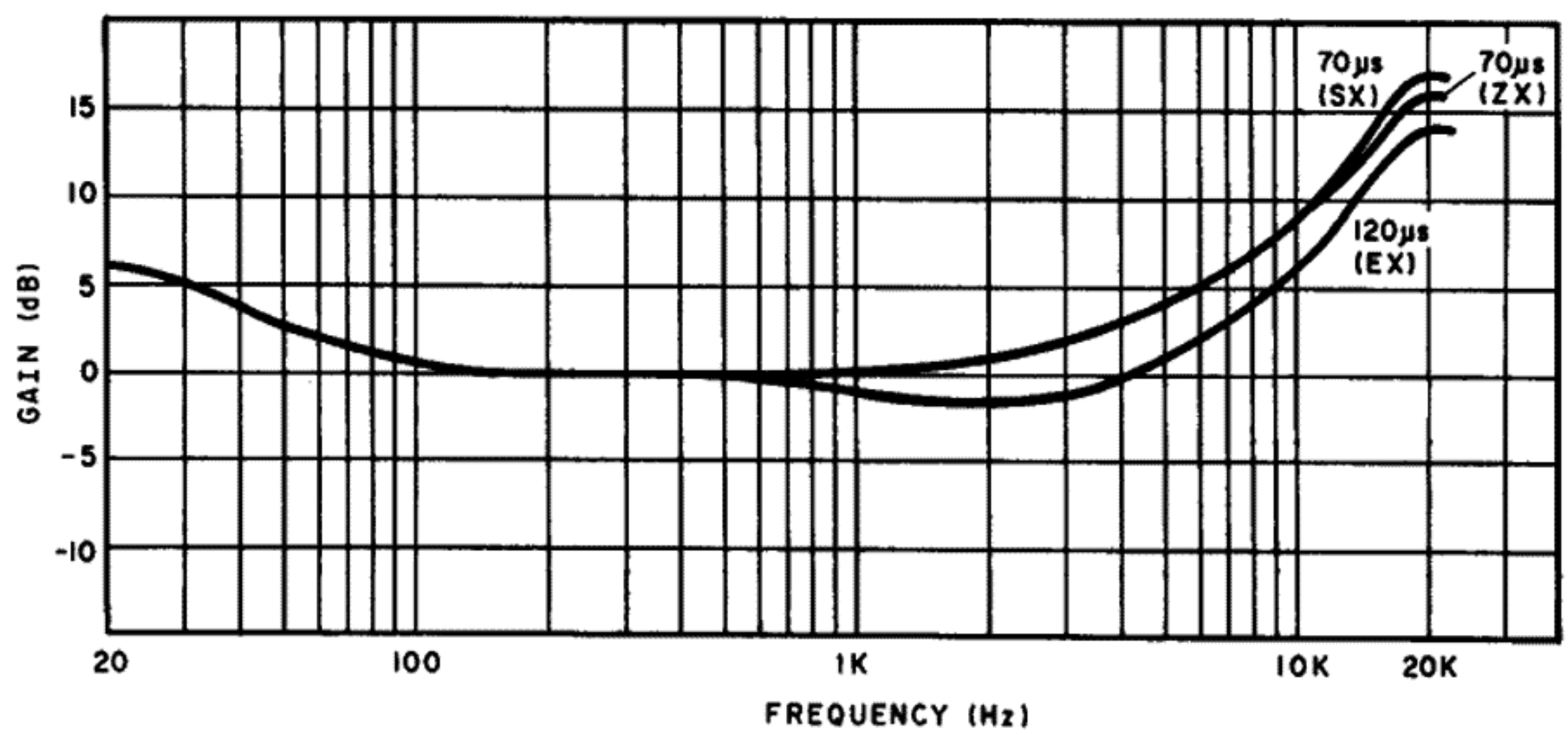

Fig. 10.2.2

11. SPECIFICATIONS

Track Configuration	4 Tracks/2-Channel Stereo (auto-reverse recording and playback)
Heads	2 (Erase Head x 1 Record/Playback Head x 1)
Motors (Tape Transport)	DC Servo Motor (Capstan Drive) x 1 DC Motor (Reel Drive) x 1
Power Source	100, 120, 120/220-240, 220 or 240 V AC; 50/60 Hz (According to country of sale)
Power Consumption	23 W max.
Tape Speed	1-7/8 ips. (4.8 cm/sec.) ±0.5%
Wow-and-Flutter	Less than 0.11% WTD Peak Less than 0.06% WTD RMS
Frequency Response	20 Hz—20,000 Hz (recording level —20 dB)
Signal-to-Noise Ratio	Dolby C-Type NR on <70 μs, ZX tape> Better than 68 dB (400 Hz, 3% THD, IHF A-WTD RMS) Dolby B-Type NR on <70 μs, ZX tape> Better than 62 dB (400 Hz, 3% THD, IHF A-WTD RMS)
Total Harmonic Distortion	Less than 1.0% (400 Hz, 0 dB, ZX, EXII Tape) Less than 1.2% (400 Hz, 0 dB, SX tape)
Erasure	Better than 60 dB (100 Hz, 0 dB)
Separation	Better than 36 dB (1 kHz, 0 dB)
Crosstalk	Better than 60 dB (1 kHz, 0 dB)
Bias Frequency	105 kHz
Fast-Winding Time	Approx. 85 seconds (with C-60 cassette)
Input (Line)	50 mV, 30 kΩ
Output (Line)	0.5 V (400 Hz, 0 dB, output level control at max.) 2.2 kΩ
(Headphones)	2.2 mW (400 Hz, 0 dB, output level control at max.) 8 Ω load
Dimensions	451 (W) x 136 (H) x 255 (D) millimeters 17-3/4 (W) x 5-3/8 (H) x 10 (D) inches
Approximate Weight	9 kg 19 lb. 13 oz

- Specifications and appearance design are subject to change for further improvement without notice.
- Noise Reduction System manufactured under license from Dolby Laboratories Licensing Corporation.
- The word "DOLBY" and the Double-D-Symbol are trademarks of Dolby Laboratories Licensing Corporation.

Service Manual

Nakamichi RX-202, RX-202E

Nakamichi Corporation

Tokyo Office
Shinjuku Daiichi Seimei Bldg.
2-7-1 Nishishinjuku, Shinjuku-ku, Tokyo
Phone (03) 342-4461
Telex : 2324721 (NAKAM J)

Nakamichi U.S.A. Corporation

1101 Colorado Avenue
Santa Monica, Calif. 90401
Phone : (213) 451-5901
Telex : 652429 (NAKREI SNM)

Nakamichi GmbH

Stephanienstrasse 6, 4000 Duesseldorf 1
Phone : (0211) 359036
Telex : 8588834 (NAKA D)

O-831110A Printed in Japan

Correction of Description Error (Nakamichi RX-202 & RX-202E)

Description of volume reference Nos. and side A/B of the cassette case for the CAT control circuit is corrected as follows:

1. Item 2.5 on page 2.
   Correction: VR502 is changed to VR503 and VR503 is change to VR502.
   Please use the following procedures:

   2.5. Slide Base Position Adjustment (on the Logic P.C.B. Ass'y)
   (1) Pull out the connector CN-7 on the Logic P.C.B. Ass'y.
   (2) Ground the test pin CAM B with a jumper wire to set the cassette case to its side A.
   (3) Adjust VR503 to obtain a gap of 2 to 4 mm as shown in Fig. 2.4.
   (4) Ground the test pins CAM B and CAM A with jumper wires to set the cassette case to its side B.
   (5) Adjust VR502 to obtain a gap of 2 to 4 mm as shown in Fig. 2.4.
   (6) Ground only the test pin CAM A with a jumper wire to set the cassette case to its eject position.
   (7) Adjust VR501 to the position where the cassette case is about to start rotation.
   (8) Repeat above steps (2) to (7) two or three times.
   (9) Plug CN-7 into the original place.

2. Parts location diagram for Logic P.C.B. Ass'y on page 4.

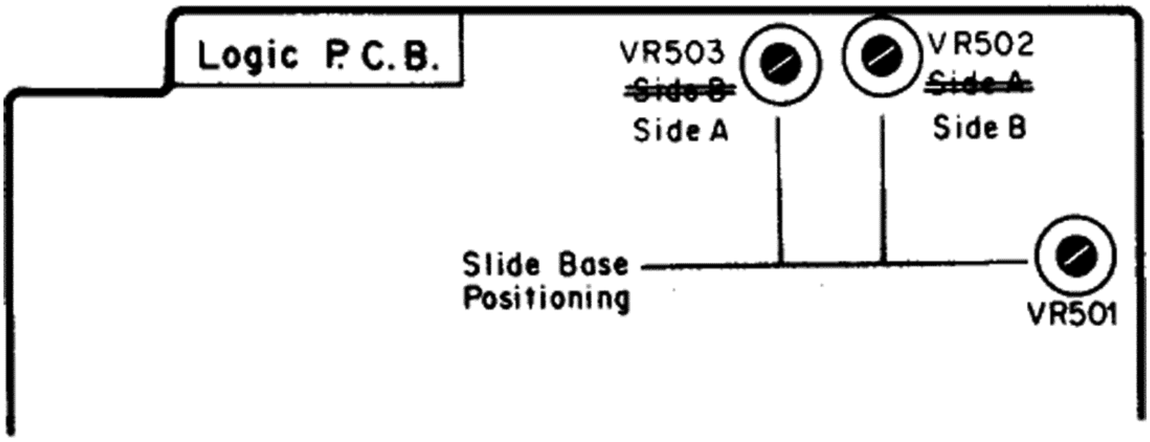
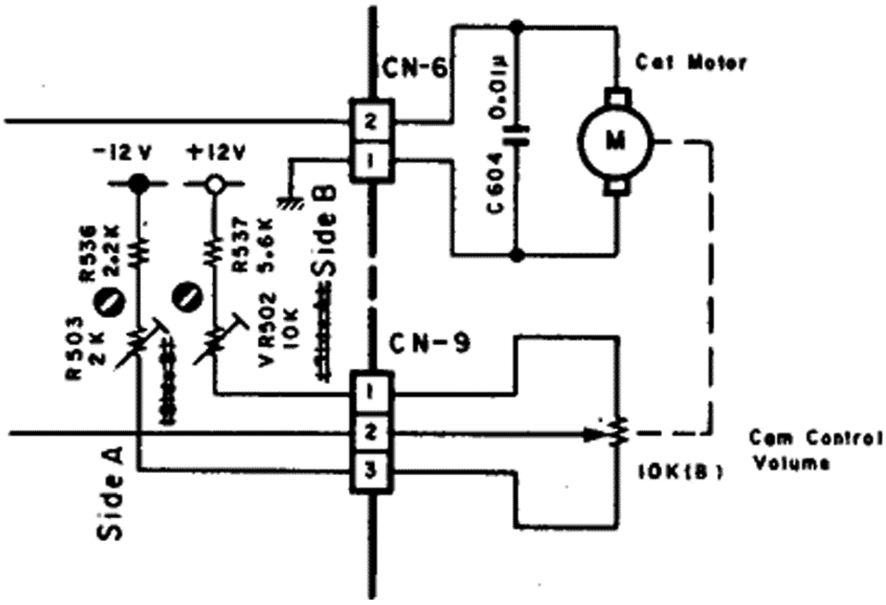
3. Schematic diagram of Logic circuit on page 29.
   (CAT control circuit on the bottom right of the diagram.)